ROGERS SPRAYERS INC.

141 - 105th Street East
Saskatoon, SK S7N 1Z2
Canada

Phone: (306) 975-0500
Fax: (306) 975-0499
Email: info@rogerssprayers.com
Web: www.rogerssprayers.com

ETT2000/1500/1000

Electric Turf Tower

Assembly, Parts and Operator's Manual

Table of Contents

Minimize Chemical Drift 3
Nozzles 3
Trouble Shooting 3
Cleaning 3
Winterizing 3
Calibration 3
Application Rate Tables 4
ETT2000 Shroud Assembly 6
ETT2000 Frame Assembly 7
ETT2000 Plumbing Assembly 8
ETT1500 Shroud Assembly 9
ETT1500 Frame Assembly 10
ETT1500 Plumbing Assembly 11
ETT1000 Shroud Assembly 12
ETT1000 Frame Assembly 13
ETT1000 Plumbing Assembly 14
ORC Assembly 15
Wiring Harness 16
Warranty 17

Visit our website, www.rogerssprayers.com, for additional models.

Minimize Chemical Drift

The ***Windfoil*** sprayer has been designed in wind tunnels to control airflow around and behind the sprayer to minimize drift, allowing safe spraying in windy conditions. Drift can blow off a field after it has been sprayed, especially in high winds. Reasonable caution should be taken, in order to spray effectively and safely.

Nozzles

The Turf Electric is equipped with 110º spray tips, spaced at 20". Tips are mounted with self-aligning ¼ turn caps for easy removal or change. Tips that are greater than 110º will cause dripping from the outside edges of the sprayer.

Trouble Shooting

If dripping occurs, caused by the diaphragm not seating properly, the diaphragm may be hard, cracked, or the seating may be damaged.

Cleaning

Sprayers need to be cleaned to prevent corrosion, to prevent cross contamination of chemicals, and to prevent any grit or solids in the liquid that will reduce pressure. Flush with clean water, preferably after each day's operation. Rinse the outside of the sprayer.

Winterizing

After the sprayer is thoroughly cleaned, put 2 to 5 quarts of rust inhibitor or antifreeze in the tank for final system flushing to help prevent corrosion.

Calibration

To calibrate, operate the sprayer at the desired pressure. Collect the output from each nozzle for 60 seconds, using an accurate measuring cup. Record the output from each nozzle. Replace nozzles that are more than 5% above or below the average reading, or have a visibly distorted spray pattern.

Run a speed test in the area to be sprayed, with a full tank. The sprayer must be at operating speed before starting the test run. To determine the speed, mark off a distance as found on one of the tables below. Spray this distance, carefully noting and recording the time to cover the distance. The actual speed can be found for the specific distance traveled and time to travel, using the table.

After the nozzles have been individually checked, the sprayer should be calibrated to determine the correct speed for the desired application volume. To get area covered, multiply the width [ETT1000, 3.3'(1m), ETT1500, 5'(1.5m), ETT2000, 6.7'(2m)] X distance.

Table 1: Time in seconds to travel a distance of:

Mph	10'	25'	50'	100'
2.5	2.7	6.8	13.6	27.3
3	2.3	5.7	11.4	22.7
4	1.7	4.3	8.5	17.0

Table 2: Time in seconds to travel a distance of:

Km/h	10m	25m	50m	100m
3	12.0	30.0	60.0	120.0
4	9.0	22.5	45.0	90.0
5	7.2	18.0	36.0	72.0

ETT2000

Metric Application Rates at 20" Nozzle Spacing (0.5 meters)
110 Degree Tips

Rog-ers Part #	Tip Number	Tip Mfg	Liquid Press psi	Liquid Press bars	Cap /noz. gpm	U. S. GALLONS PER ACRE 2.5 mph	3 mph	4 mph	5 mph	7 mph	Liters/Hectare 4 kph	4.8 kph	6.4 kph	8 kph	11.2 kph
01369	8001VS (100 mesh)	Teejet	30	2.07	0.087	10.3	8.6	6.4	5.1	3.7	96	80	60	48	34
			40	2.76	0.100	11.9	9.9	7.4	5.9	4.2	111	93	69	56	40
			50	3.45	0.112	13.3	11.1	8.3	6.6	4.7	124	103	78	62	44
			60	4.14	0.122	14.5	12.1	9.1	7.3	5.2	136	113	85	68	49
00827	80015VS or	Teejet	30	2.07	0.130	15.4	12.9	9.6	7.7	5.5	144	120	90	72	52
			40	2.76	0.150	17.8	14.9	11.1	8.9	6.4	167	139	104	83	60
13351	API-80015 (100 mesh)	Albuz	50	3.45	0.168	19.9	16.6	12.5	10.0	7.1	186	155	116	93	67
			60	4.14	0.184	21.8	18.2	13.6	10.9	7.8	204	170	128	102	73
05876	8002VS or	Teejet	30	2.07	0.173	20.6	17.1	12.9	10.3	7.3	192	160	120	96	69
			40	2.76	0.200	23.8	19.8	14.9	11.9	8.5	222	185	139	111	79
14384	AXI-8002 (50 mesh)	Albuz	50	3.45	0.224	26.6	22.1	16.6	13.3	9.5	248	207	155	124	89
			60	4.14	0.245	29.1	24.2	18.2	14.5	10.4	272	227	170	136	97
05877	8003VS or	Teejet	30	2.07	0.260	30.9	25.7	19.3	15.4	11.0	289	240	180	144	103
			40	2.76	0.300	35.6	29.7	22.3	17.8	12.7	333	278	208	167	119
14385	AXI-8003 (50 mesh)	Albuz	50	3.45	0.335	39.8	33.2	24.9	19.9	14.2	373	310	233	186	133
			60	4.14	0.367	43.6	36.4	27.3	21.8	15.6	408	340	255	204	146
05878	8004VS or	Teejet	30	2.07	0.346	41.2	34.3	25.7	20.6	14.7	385	321	240	192	137
			40	2.76	0.400	47.5	39.6	29.7	23.8	17.0	444	370	278	222	159
14061	AXI-8004 (50 mesh)	Albuz	50	3.45	0.447	53.1	44.3	33.2	26.6	19.0	497	414	310	248	177
			60	4.14	0.490	58.2	48.5	36.4	29.1	20.8	544	453	340	272	194
05879	8005VS or	Teejet	30	2.07	0.433	51.4	42.9	32.2	25.7	18.4	481	401	301	240	172
			40	2.76	0.500	59.4	49.5	37.1	29.7	21.2	555	463	347	278	198
14386	AXI-8005 (50 mesh)	Albuz	50	3.45	0.559	66.4	55.3	41.5	33.2	23.7	621	517	388	310	222
			60	4.14	0.612	72.7	60.6	45.5	36.4	26.0	680	567	425	340	243

ETT1500 / ETT1000

Metric Application Rates at 12" Spacing (0.3 meters)
80 Deg. Tips

Rogers Part #	Tip Number	Tip Mfg	Liquid Press psi	Liquid Press bars	Capacity 1 nozzle gpm	U. S. GALLONS PER ACRE 2.5 mph	3 mph	4 mph	5 mph	7 mph	Liters/Hectare 4 kph	4.8 kph	6.4 kph	8 kph	11.2 kph
05872	800067SS	Teejet	30	2.07	0.058	11.5	9.6	7.2	5.7	4.1	107	90	67	54	38
	(200 mesh)		40	2.76	0.067	13.3	11.1	8.3	6.6	4.7	124	103	78	62	44
			50	3.45	0.075	14.8	12.4	9.3	7.4	5.3	139	116	87	69	50
			60	4.14	0.082	16.2	13.5	10.2	8.1	5.8	152	127	95	76	54
01369	8001VS	Teejet	30	2.07	0.087	17.1	14.3	10.7	8.6	6.1	160	134	100	80	57
	(100 mesh)		40	2.76	0.100	19.8	16.5	12.4	9.9	7.1	185	154	116	93	66
			50	3.45	0.112	22.1	18.4	13.8	11.1	7.9	207	172	129	103	74
			60	4.14	0.122	24.2	20.2	15.2	12.1	8.7	227	189	142	113	81
00827	80015VS	Teejet	30	2.07	0.130	25.7	21.4	16.1	12.9	9.2	240	200	150	120	86
	or		40	2.76	0.150	29.7	24.8	18.6	14.9	10.6	278	231	174	139	99
13351	API-80015	Albuz	50	3.45	0.168	33.2	27.7	20.8	16.6	11.9	310	259	194	155	111
	(100 mesh)		60	4.14	0.184	36.4	30.3	22.7	18.2	13.0	340	283	213	170	121
05876	8002VS	Teejet	30	2.07	0.173	34.3	28.6	21.4	17.1	12.2	321	267	200	160	115
	or		40	2.76	0.200	39.6	33.0	24.8	19.8	14.1	370	309	231	185	132
14384	AXI-8002	Albuz	50	3.45	0.224	44.3	36.9	27.7	22.1	15.8	414	345	259	207	148
	(50 mesh)		60	4.14	0.245	48.5	40.4	30.3	24.2	17.3	453	378	283	227	162
05877	8003VS	Teejet	30	2.07	0.260	51.4	42.9	32.2	25.7	18.4	481	401	301	240	172
	or		40	2.76	0.300	59.4	49.5	37.1	29.7	21.2	555	463	347	278	198
14385	AXI-8003	Albuz	50	3.45	0.335	66.4	55.3	41.5	33.2	23.7	621	517	388	310	222
	(50 mesh)		60	4.14	0.367	72.7	60.6	45.5	36.4	26.0	680	567	425	340	243
05878	8004VS	Teejet	30	2.07	0.346	68.6	57.2	42.9	34.3	24.5	641	534	401	321	229
	or		40	2.76	0.400	79.2	66.0	49.5	39.6	28.3	741	617	463	370	264
14061	AXI-8004	Albuz	50	3.45	0.447	88.5	73.8	55.3	44.3	31.6	828	690	517	414	296
	(50 mesh)		60	4.14	0.490	97.0	80.8	60.6	48.5	34.6	907	756	567	453	324
05879	8005VS	Teejet	30	2.07	0.433	85.7	71.4	53.6	42.9	30.6	802	668	501	401	286
	or		40	2.76	0.500	99.0	82.5	61.9	49.5	35.4	926	771	579	463	331
14386	AXI-8005	Albuz	50	3.45	0.559	110.7	92.2	69.2	55.3	39.5	1035	862	647	517	370
	(50 mesh)		60	4.14	0.612	121.2	101.0	75.8	60.6	43.3	1134	945	709	567	405

ETT2000 Shroud Assembly Part # 15556

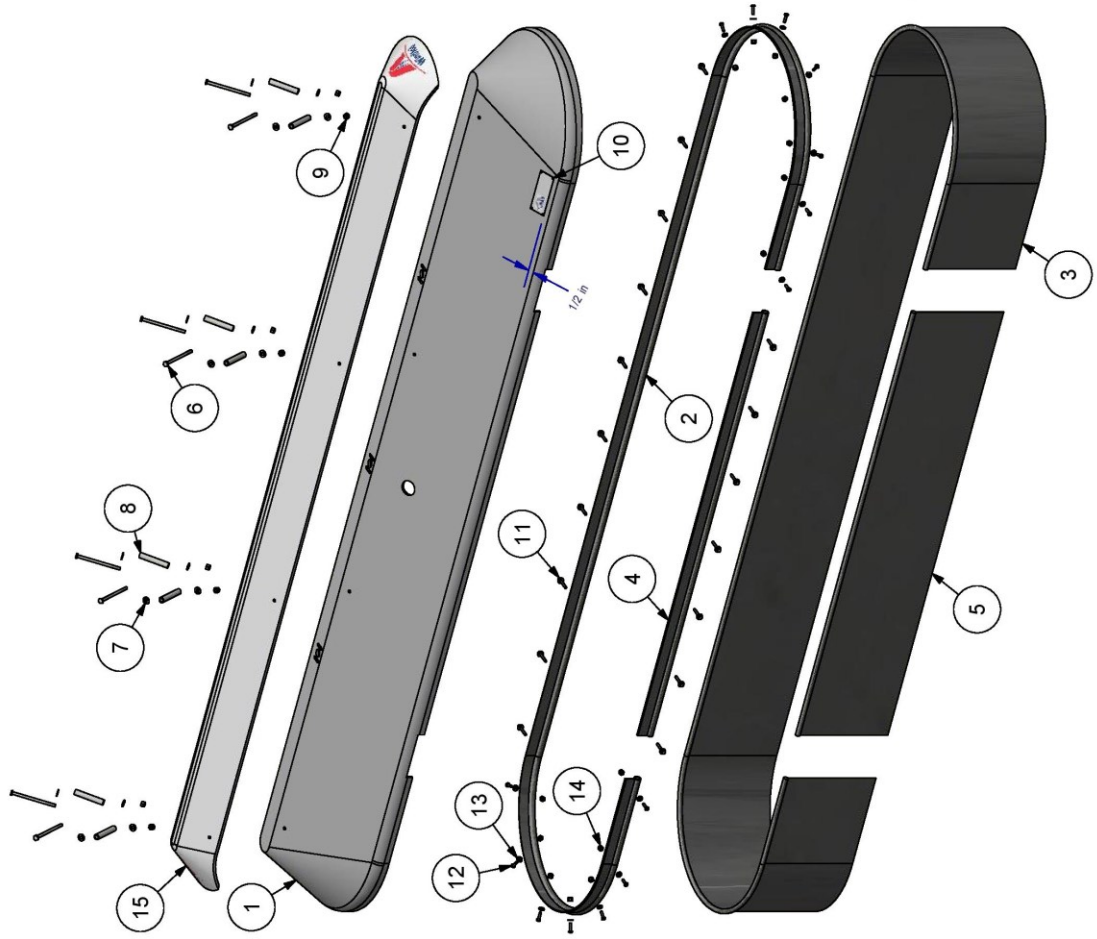

PARTS LIST

ITEM	QTY	PART#	DESCRIPTION
1	1	14170ETT	SHROUD LP 80 GREY PREP ETT
2	1	14206	FLEXI-SHIELD HANGER 151"
3	1	14208	FLEXI-SHIELD 9.625Wx151"
4	1	14207	FLEXISHIELD HANGER, 44.625"
5	1	14209	FLEXI-SHIELD 9.625Wx44"
6	8	05415	BOLT, 1/4NCx4, PLD
7	16	01157	WASHER FLAT, 1/4"
8	8	14843	AIRFOIL STANDOFF BACK TUBE
9	8	00968	NUT NYLOCK 1/4" PLD
10	1	01398	SERIAL PLATE
11	17	14472	SCREW TEK #12x1-1/4
12	14	01152	SCREW MACH. #10-24x3/4, TRUSS
13	14	01183	WASHER FLAT #10
14	14	01153	NUT, NYLOCK #10-24 PLD
15	1	01654	AIRFOIL 88" PREPPED

ASSEMBLY INSTRUCTIONS:

A. INSTALL ITEM# 2 (SHROUD) TO FRAME (PART# 14203) USING POP RIVETS (PART# 14470) ALONG FRONT AND REAR TUBES. 3 RIVETS ON FRONT, 3 RIVETS ON BACK.

B. INSTALL ITEM# 11 (SERIAL PLATE) TO ITEM# 2 (SHROUD) USING POP RIVETS (PART# 14470) APROX 1/2" FROM THE BOTTOM EDGE AND 1/2" FROM THE CORNER EDGE

C. INSTALL HANGER TO FRAME USING ITEM# 12 (TEK SCREWS) AT APROX 7" SPACING (NOTE SCREWS GO THROUGH SHROUD INTO CENTER OF 1" TUBE ON MAIN FRAME).

D. USE WOOD SCREW #5-3/8 (PART# 14728) ATTACH CURTAIN TO FLEXISHIELD. STARTING FROM UNDER SHROUD, INSTALL SCREW THROUGH FLEXISHIELD INTO ROPE OF CURTAIN. APPROXIMATELY 10" SPACINGS BETWEEN SCREWS.

ADDITIONAL ITEMS

- 14470 - RIVET POP 1/8x1/2 Al/Stl - 10 PCS
- 14728 - SCREW WOOD #8-5/8" SELF TAP - APRX 16 PCS

DRAWN: WAJIH HASSAN	ROGERS SPRAYERS INC.
DATE CREATED: 20/10/2015	TITLE ETT2000 SHROUD ASSEMBLY
PROJECT: ETT2000	DWG NO 15556
DATE CHECKED:	
SCALE 1 : 14	MATERIAL:
SIZE A	

ETT2000 Frame Assembly Part # 15554

PARTS LIST

ITEM	QTY	PART#	DESCRIPTION
1	1	14203	FRAME LP6
2	2	14475	WHEEL POLY LD
3	2	13709	NUT, JAM 5/8NC, Pld
4	2	12387	BOLT 5/8NCx5 PLD
5	11	00968	NUT NYLOCK 1/4" PLD
6	4	14297	BOLT, 1/4NCx2.75, PLD
7	1	15267	HITCH ETT W/TANK MOUNT
8	1	01070	BOLT, 1/4NCx2, PLD
9	1	01057	PLUG, TUBE, SQ. PLASTIC 1.5"
10	4	07157	SCREW MACH. #10-24x1, TRUSS
11	4	01183	WASHER FLAT #10
12	4	01153	NUT, NYLOCK #10-24 PLD
13	2	15014	BOLT CARRIAGE 1/4NCx3
14	1	14005	HITCH PLATE, 1" TUBE
15	2	14509	BOLT M6-1.00 x 12MM
16	2	05567	WASHER LOCK 1/4 PLD
17	2	01056	PLUG, 1" SQ. PLASTIC
18	2	14471	SCREW TEK #12x1

NOTES:

A. ITEM# 6 (1/4 BOLT) ASSEMBLY THROUGH SHROUD (PART# 02703ETT)
B. ITEM# 8(1/4 BOLT) TO ASSEMBLE FLOW KIT (PART# 14881)
C. ITEM# 15(#10 SCREW) TO ASSEMBLE 12V PUMP (PART# 14498)
D. ITEM# 18(TEK SCREW) TO FASTEN THE NOTCHED PART OF THE CURTAIN TO ITEM# 1
E. ITEM# 5* (NUT) QTY 4 TO FASTEN THE TANK (PART#13664ETT) TO ITEM# 5

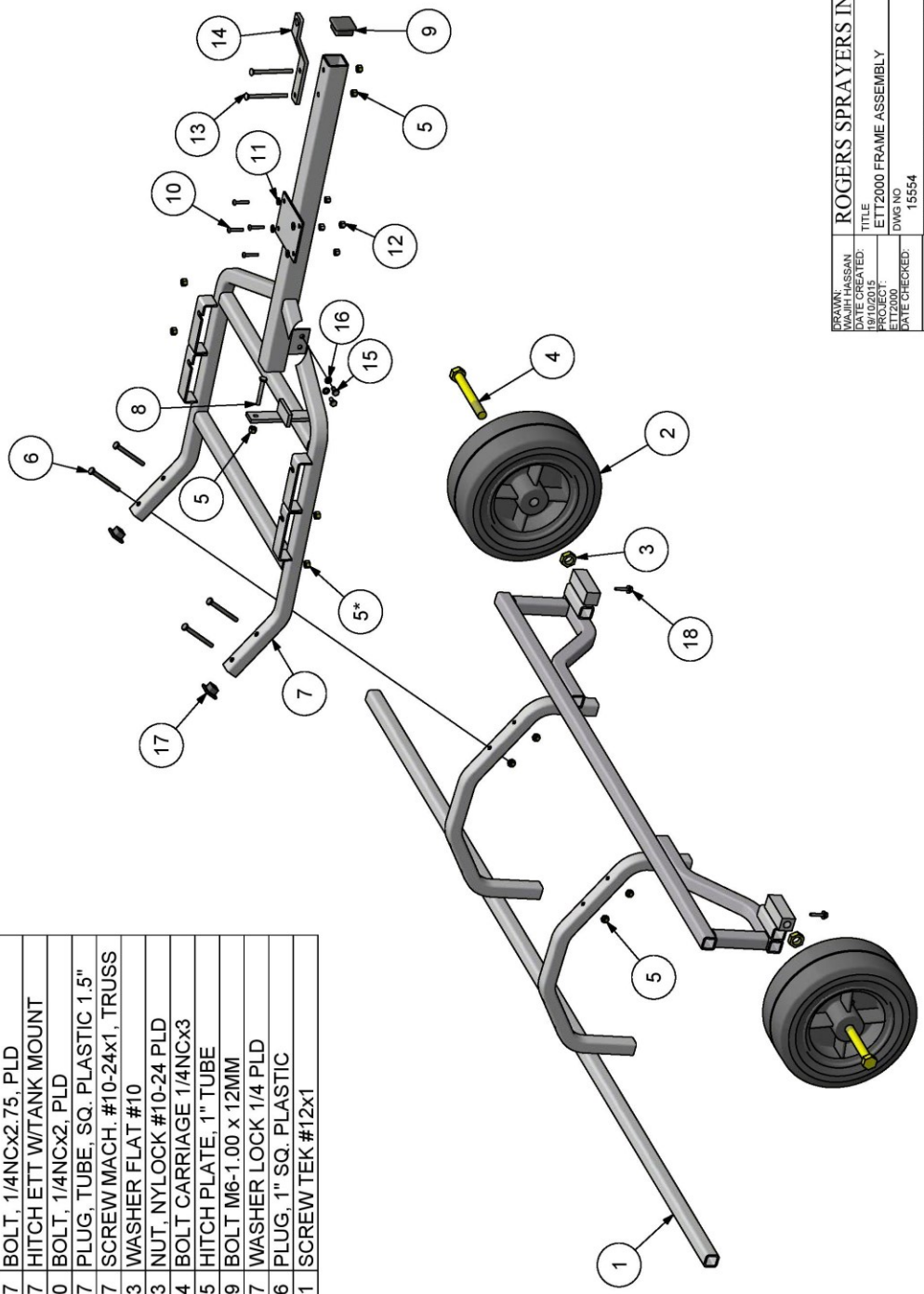

DRAWN: WAQAR HASSAN
DATE CREATED: 19/10/2015
PROJECT: ETT2000
DATE CHECKED:

ROGERS SPRAYERS INC.

TITLE: ETT2000 FRAME ASSEMBLY

DWG NO: 15554

SCALE: 1 : 10
MATERIAL:
SIZE: A

ETT2000 Plumbing Assembly Part # 15555

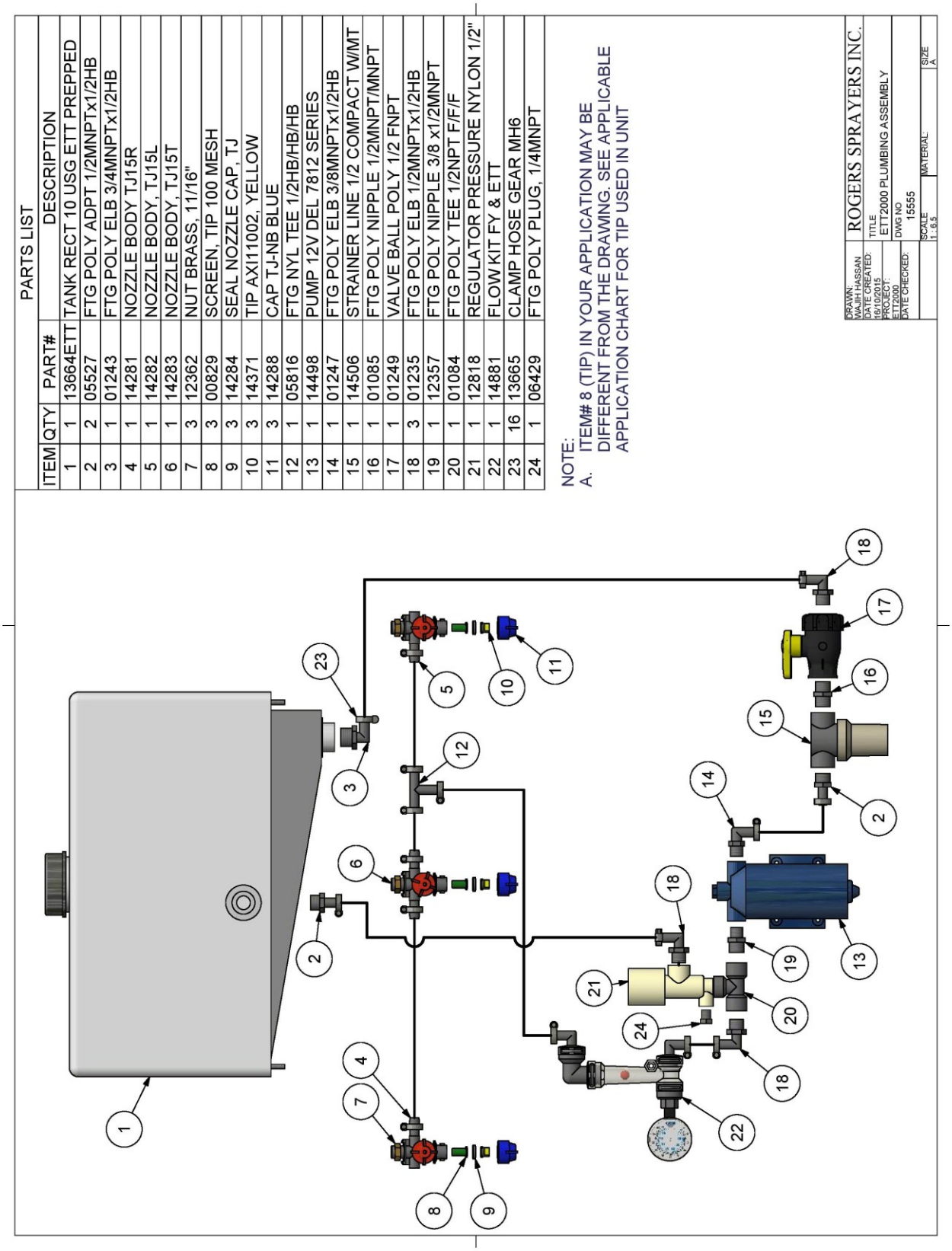

PARTS LIST

ITEM	QTY	PART#	DESCRIPTION
1	1	13664ETT	TANK RECT 10 USG ETT PREPPED
2	2	05527	FTG POLY ADPT 1/2MNPTx1/2HB
3	1	01243	FTG POLY ELB 3/4MNPTx1/2HB
4	1	14281	NOZZLE BODY TJ15R
5	1	14282	NOZZLE BODY, TJ15L
6	1	14283	NOZZLE BODY, TJ15T
7	3	12362	NUT BRASS, 11/16"
8	3	00829	SCREEN, TIP 100 MESH
9	3	14284	SEAL NOZZLE CAP, TJ
10	3	14371	TIP AXI11002, YELLOW
11	3	14288	CAP TJ-NB BLUE
12	1	05816	FTG NYL TEE 1/2HB/HB/HB
13	1	14498	PUMP 12V DEL 7812 SERIES
14	1	01247	FTG POLY ELB 3/8MNPTx1/2HB
15	1	14506	STRAINER LINE 1/2 COMPACT W/MT
16	1	01085	FTG POLY NIPPLE 1/2MNPT/MNPT
17	1	01249	VALVE BALL POLY 1/2 FNPT
18	3	01235	FTG POLY ELB 1/2MNPTx1/2HB
19	1	12357	FTG POLY NIPPLE 3/8 x1/2MNPT
20	1	01084	FTG POLY TEE 1/2NPT F/F/F
21	1	12818	REGULATOR PRESSURE NYLON 1/2"
22	1	14881	FLOW KIT FY & ETT
23	16	13665	CLAMP HOSE GEAR MH6
24	1	06429	FTG POLY PLUG, 1/4MNPT

NOTE:
A. ITEM# 8 (TIP) IN YOUR APPLICATION MAY BE DIFFERENT FROM THE DRAWING. SEE APPLICABLE APPLICATION CHART FOR TIP USED IN UNIT

DRAWN: MATHIAS ASSAN
DATE CREATED: 16/10/2015
PROJECT: ETT2000
DATE CHECKED:
ROGERS SPRAYERS INC.
TITLE ETT2000 PLUMBING ASSEMBLY
DWG NO 15555
SCALE 1 : 6.5
MATERIAL:
SIZE A

ETT1500 Shroud Assembly Part # 15553

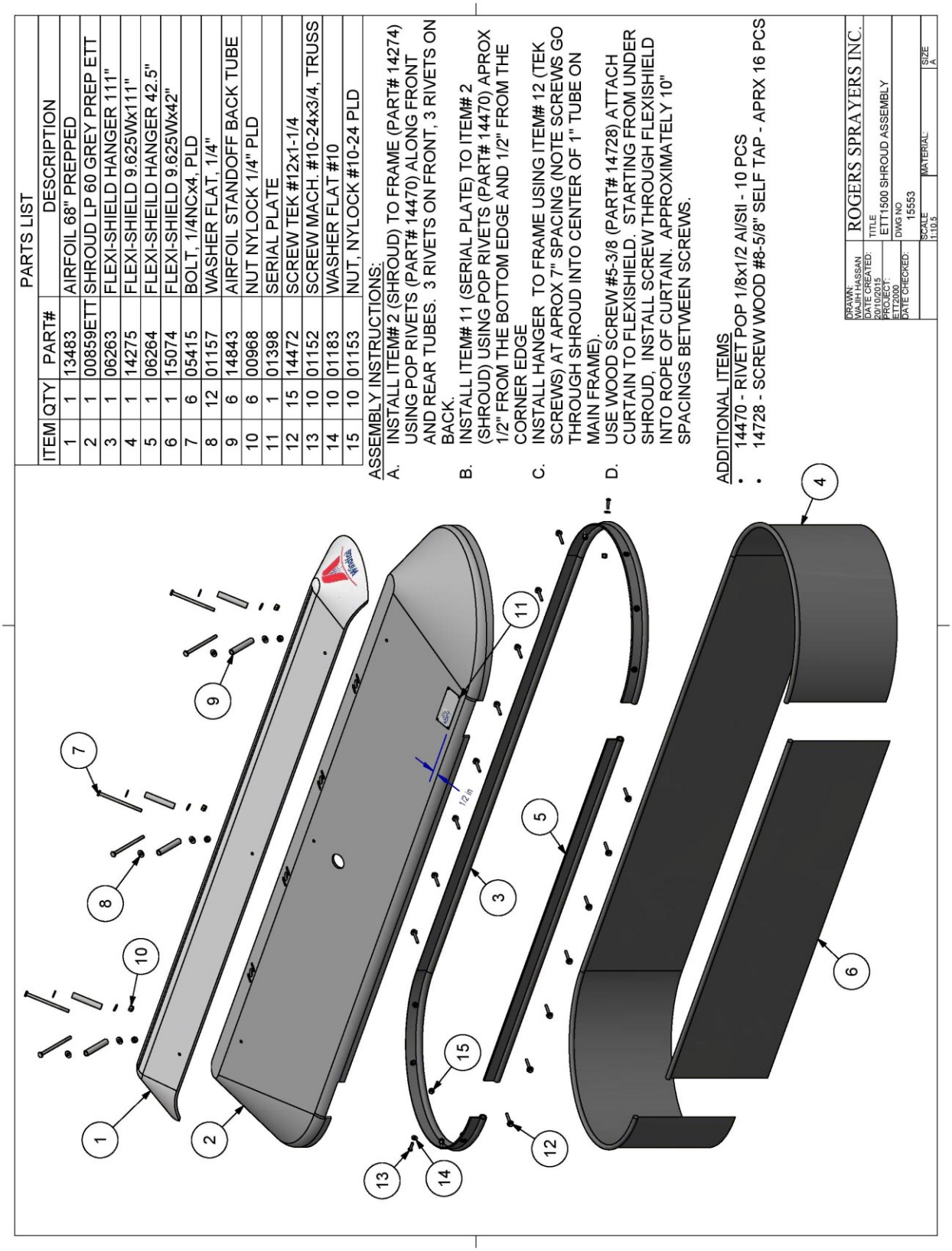

PARTS LIST

ITEM	QTY	PART#	DESCRIPTION
1	1	13483	AIRFOIL 68" PREPPED
2	1	00859ETT	SHROUD LP 60 GREY PREP ETT
3	1	06263	FLEXI-SHIELD HANGER 111"
4	1	14275	FLEXI-SHIELD 9.625Wx111"
5	1	06264	FLEXI-SHEILD HANGER 42.5"
6	1	15074	FLEXI-SHIELD 9.625Wx42"
7	6	05415	BOLT, 1/4NCx4, PLD
8	12	01157	WASHER FLAT, 1/4"
9	6	14843	AIRFOIL STANDOFF BACK TUBE
10	6	00968	NUT NYLOCK 1/4" PLD
11	1	01398	SERIAL PLATE
12	15	14472	SCREW TEK #12x1-1/4
13	10	01152	SCREW MACH. #10-24x3/4, TRUSS
14	10	01183	WASHER FLAT #10
15	10	01153	NUT, NYLOCK #10-24 PLD

ASSEMBLY INSTRUCTIONS:

A. INSTALL ITEM# 2 (SHROUD) TO FRAME (PART# 14274) USING POP RIVETS (PART# 14470) ALONG FRONT AND REAR TUBES. 3 RIVETS ON FRONT, 3 RIVETS ON BACK.

B. INSTALL ITEM# 11 (SERIAL PLATE) TO ITEM# 2 (SHROUD) USING POP RIVETS (PART# 14470) APROX 1/2" FROM THE BOTTOM EDGE AND 1/2" FROM THE CORNER EDGE

C. INSTALL HANGER TO FRAME USING ITEM# 12 (TEK SCREWS) AT APROX 7" SPACING (NOTE SCREWS GO THROUGH SHROUD INTO CENTER OF 1" TUBE ON MAIN FRAME).

D. USE WOOD SCREW #5-3/8 (PART# 14728) ATTACH CURTAIN TO FLEXISHIELD. STARTING FROM UNDER SHROUD, INSTALL SCREW THROUGH FLEXISHIELD INTO ROPE OF CURTAIN. APPROXIMATELY 10" SPACINGS BETWEEN SCREWS.

ADDITIONAL ITEMS

- 14470 - RIVET POP 1/8x1/2 Al/Stl - 10 PCS
- 14728 - SCREW WOOD #8-5/8" SELF TAP - APRX 16 PCS

DRAWN: WAJIH HASSAN
DATE CREATED: 20/10/2015
PROJECT: ETT2000
DATE CHECKED:
ROGERS SPRAYERS INC.
TITLE: ETT1500 SHROUD ASSEMBLY
DWG NO: 15553
SCALE: 1:10.5
MATERIAL:
SIZE: A

ETT1500 Frame Assembly Part # 15551

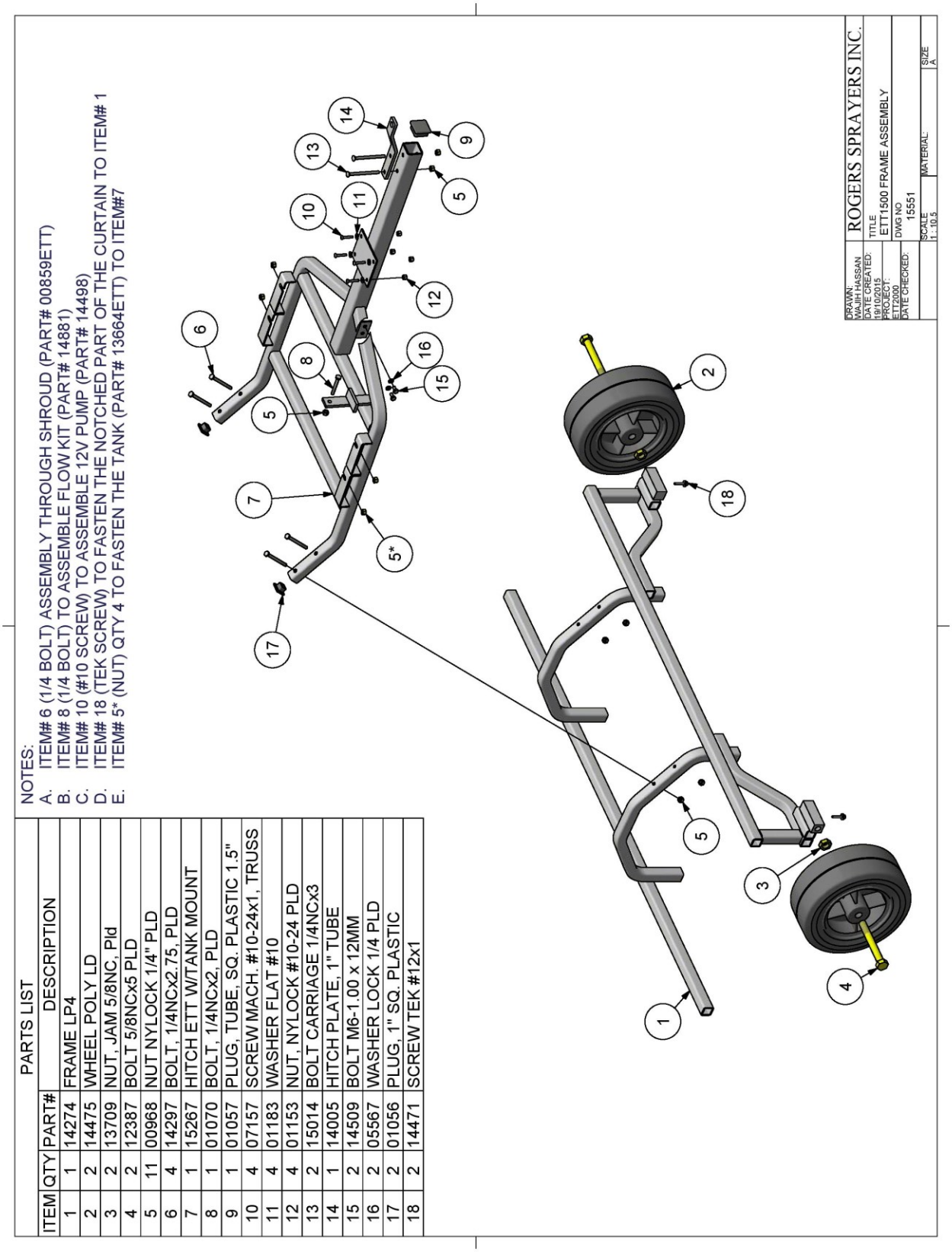

PARTS LIST

ITEM	QTY	PART#	DESCRIPTION
1	1	14274	FRAME LP4
2	2	14475	WHEEL POLY LD
3	2	13709	NUT, JAM 5/8NC, Pld
4	2	12387	BOLT 5/8NCx5 PLD
5	11	00968	NUT NYLOCK 1/4" PLD
6	4	14297	BOLT, 1/4NCx2.75, PLD
7	1	15267	HITCH ETT W/TANK MOUNT
8	1	01070	BOLT, 1/4NCx2, PLD
9	1	01057	PLUG, TUBE, SQ. PLASTIC 1.5"
10	4	07157	SCREW MACH. #10-24x1, TRUSS
11	4	01183	WASHER FLAT #10
12	4	01153	NUT, NYLOCK #10-24 PLD
13	2	15014	BOLT CARRIAGE 1/4NCx3
14	1	14005	HITCH PLATE, 1" TUBE
15	2	14509	BOLT M6-1.00 x 12MM
16	2	05567	WASHER LOCK 1/4 PLD
17	2	01056	PLUG, 1" SQ. PLASTIC
18	2	14471	SCREW TEK #12x1

ETT1500 Plumbing Assembly Part # 15552

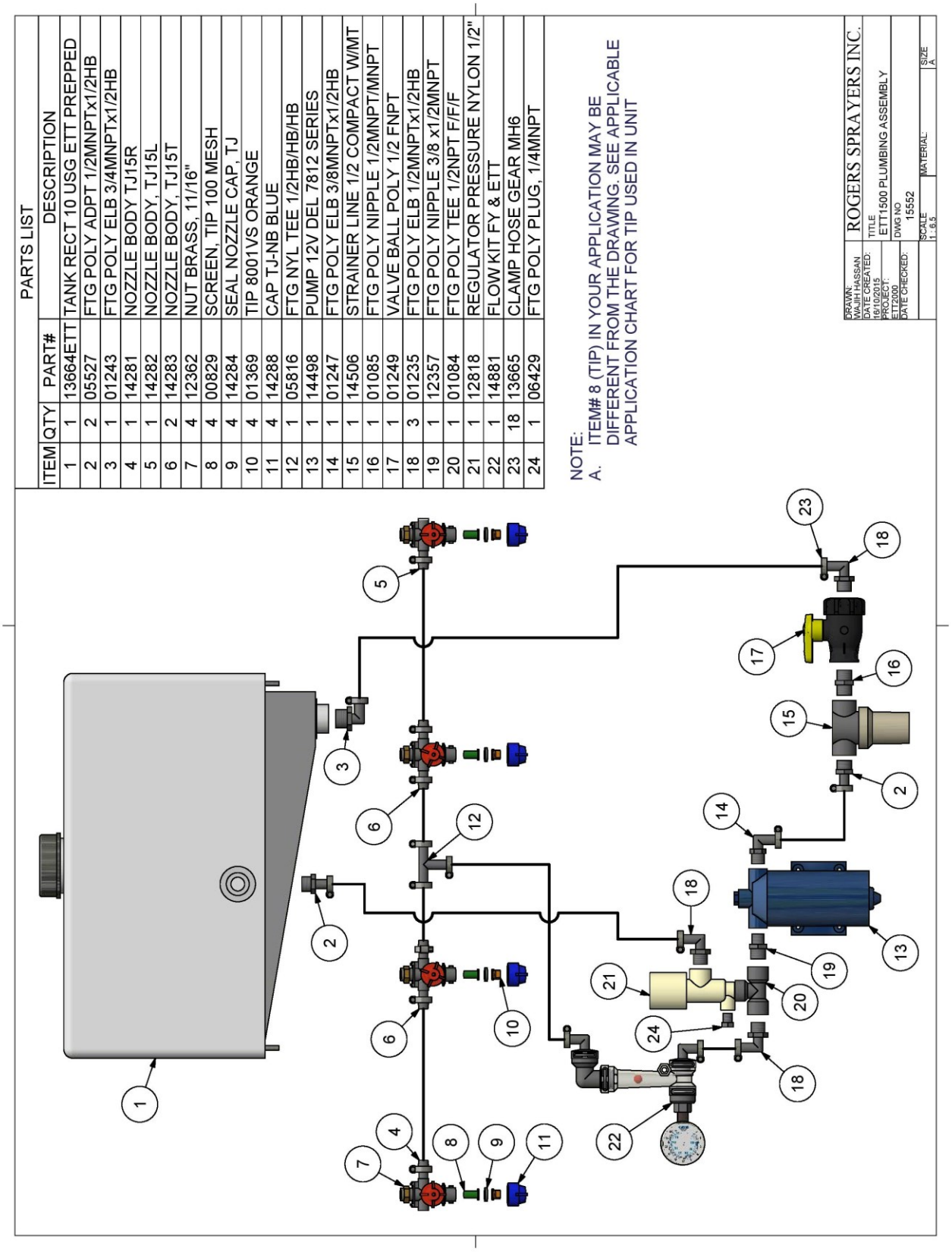

PARTS LIST

ITEM	QTY	PART#	DESCRIPTION
1	1	13664ETT	TANK RECT 10 USG ETT PREPPED
2	2	05527	FTG POLY ADPT 1/2MNPTx1/2HB
3	1	01243	FTG POLY ELB 3/4MNPTx1/2HB
4	1	14281	NOZZLE BODY TJ15R
5	1	14282	NOZZLE BODY, TJ15L
6	2	14283	NOZZLE BODY, TJ15T
7	4	12362	NUT BRASS, 11/16"
8	4	00829	SCREEN, TIP 100 MESH
9	4	14284	SEAL NOZZLE CAP, TJ
10	4	01369	TIP 8001VS ORANGE
11	4	14288	CAP TJ-NB BLUE
12	1	05816	FTG NYL TEE 1/2HB/HB/HB
13	1	14498	PUMP 12V DEL 7812 SERIES
14	1	01247	FTG POLY ELB 3/8MNPTx1/2HB
15	1	14506	STRAINER LINE 1/2 COMPACT W/MT
16	1	01085	FTG POLY NIPPLE 1/2MNPT/MNPT
17	1	01249	VALVE BALL POLY 1/2 FNPT
18	3	01235	FTG POLY ELB 1/2MNPTx1/2HB
19	1	12357	FTG POLY NIPPLE 3/8 x1/2MNPT
20	1	01084	FTG POLY TEE 1/2NPT F/F/F
21	1	12818	REGULATOR PRESSURE NYLON 1/2"
22	1	14881	FLOW KIT FY & ETT
23	18	13665	CLAMP HOSE GEAR MH6
24	1	06429	FTG POLY PLUG, 1/4MNPT

NOTE:
A. ITEM# 8 (TIP) IN YOUR APPLICATION MAY BE DIFFERENT FROM THE DRAWING. SEE APPLICABLE APPLICATION CHART FOR TIP USED IN UNIT

ETT1000 Shroud Assembly Part # 15550

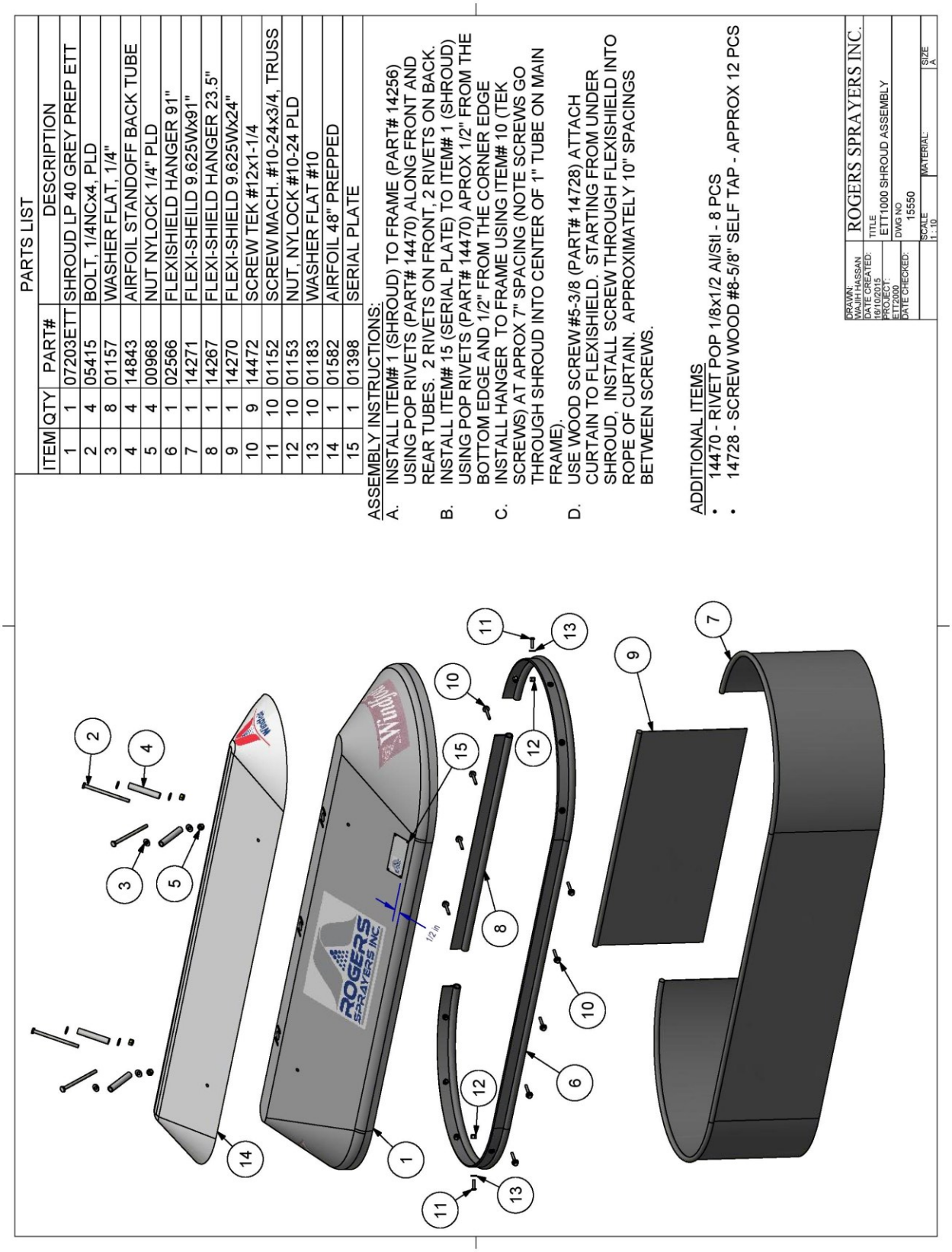

PARTS LIST

ITEM	QTY	PART#	DESCRIPTION
1	1	07203ETT	SHROUD LP 40 GREY PREP ETT
2	4	05415	BOLT, 1/4NCx4, PLD
3	8	01157	WASHER FLAT, 1/4"
4	4	14843	AIRFOIL STANDOFF BACK TUBE
5	4	00968	NUT NYLOCK 1/4" PLD
6	1	02566	FLEXISHIELD HANGER 91"
7	1	14271	FLEXI-SHEILD 9.625Wx91"
8	1	14267	FLEXI-SHIELD HANGER 23.5"
9	1	14270	FLEXI-SHIELD 9.625Wx24"
10	9	14472	SCREW TEK #12x1-1/4
11	10	01152	SCREW MACH. #10-24x3/4, TRUSS
12	10	01153	NUT, NYLOCK #10-24 PLD
13	10	01183	WASHER FLAT #10
14	1	01582	AIRFOIL 48" PREPPED
15	1	01398	SERIAL PLATE

ASSEMBLY INSTRUCTIONS:

A. INSTALL ITEM# 1 (SHROUD) TO FRAME (PART# 14256) USING POP RIVETS (PART# 14470) ALONG FRONT AND REAR TUBES. 2 RIVETS ON FRONT, 2 RIVETS ON BACK.

B. INSTALL ITEM# 15 (SERIAL PLATE) TO ITEM# 1 (SHROUD) USING POP RIVETS (PART# 14470) APROX 1/2" FROM THE BOTTOM EDGE AND 1/2" FROM THE CORNER EDGE

C. INSTALL HANGER TO FRAME USING ITEM# 10 (TEK SCREWS) AT APROX 7" SPACING (NOTE SCREWS GO THROUGH SHROUD INTO CENTER OF 1" TUBE ON MAIN FRAME).

D. USE WOOD SCREW #5-3/8 (PART# 14728) ATTACH CURTAIN TO FLEXISHIELD. STARTING FROM UNDER SHROUD, INSTALL SCREW THROUGH FLEXISHIELD INTO ROPE OF CURTAIN. APPROXIMATELY 10" SPACINGS BETWEEN SCREWS.

ADDITIONAL ITEMS

- 14470 - RIVET POP 1/8x1/2 Al/Stl - 8 PCS
- 14728 - SCREW WOOD #8-5/8" SELF TAP - APPROX 12 PCS

DRAWN: WAYNE HASSAN
DATE CREATED: 16/10/2015
PROJECT: ETT2000
DATE CHECKED:
ROGERS SPRAYERS INC.
TITLE ETT1000 SHROUD ASSEMBLY
DWG NO 15550
SCALE 1 : 10
MATERIAL:
SIZE A

ETT1000 Frame Assembly Part # 15548

NOTES:

A. ITEM# 6 (1/4 BOLT) ASSEMBLY THROUGH SHROUD (PART# 02703ETT)
B. ITEM# 15 (1/4 BOLT) TO ASSEMBLE FLOW KIT (PART# 14881)
C. ITEM# 14 (#10 SCREW) TO ASSEMBLE 12V PUMP (PART# 14498)
D. ITEM# 17 (TEK SCREW) TO FASTEN THE NOTCHED PART OF THE CURTAIN TO ITEM# 1
E. ITEM# 7* (NUT) QTY 4 TO FASTEN THE TANK (PART#13664ETT) TO ITEM# 5

PARTS LIST

ITEM	QTY	PART#	DESCRIPTION
1	1	14256	FRAME LP3
2	2	12387	BOLT 5/8NCx5 PLD
3	2	13709	NUT, JAM 5/8NC, Pld
4	2	14475	WHEEL POLY LD
5	1	15267	HITCH ETT W/TANK MOUNT
6	4	14297	BOLT, 1/4NCx2.75, PLD
7	11	00968	NUT NYLOCK 1/4" PLD
8	4	01153	NUT, NYLOCK #10-24 PLD
9	4	01183	WASHER FLAT #10
10	2	05567	WASHER LOCK 1/4 PLD
11	2	14509	BOLT M6-1.00 x 12MM
12	1	14005	HITCH PLATE, 1" TUBE
13	2	15014	BOLT CARRIAGE 1/4NCx3
14	4	07157	SCREW MACH. #10-24x1, TRUSS
15	1	01070	BOLT, 1/4NCx2, PLD
16	1	01057	PLUG, TUBE, SQ. PLASTIC 1.5"
17	2	14471	SCREW TEK #12x1
18	2	01056	PLUG, 1" SQ. PLASTIC

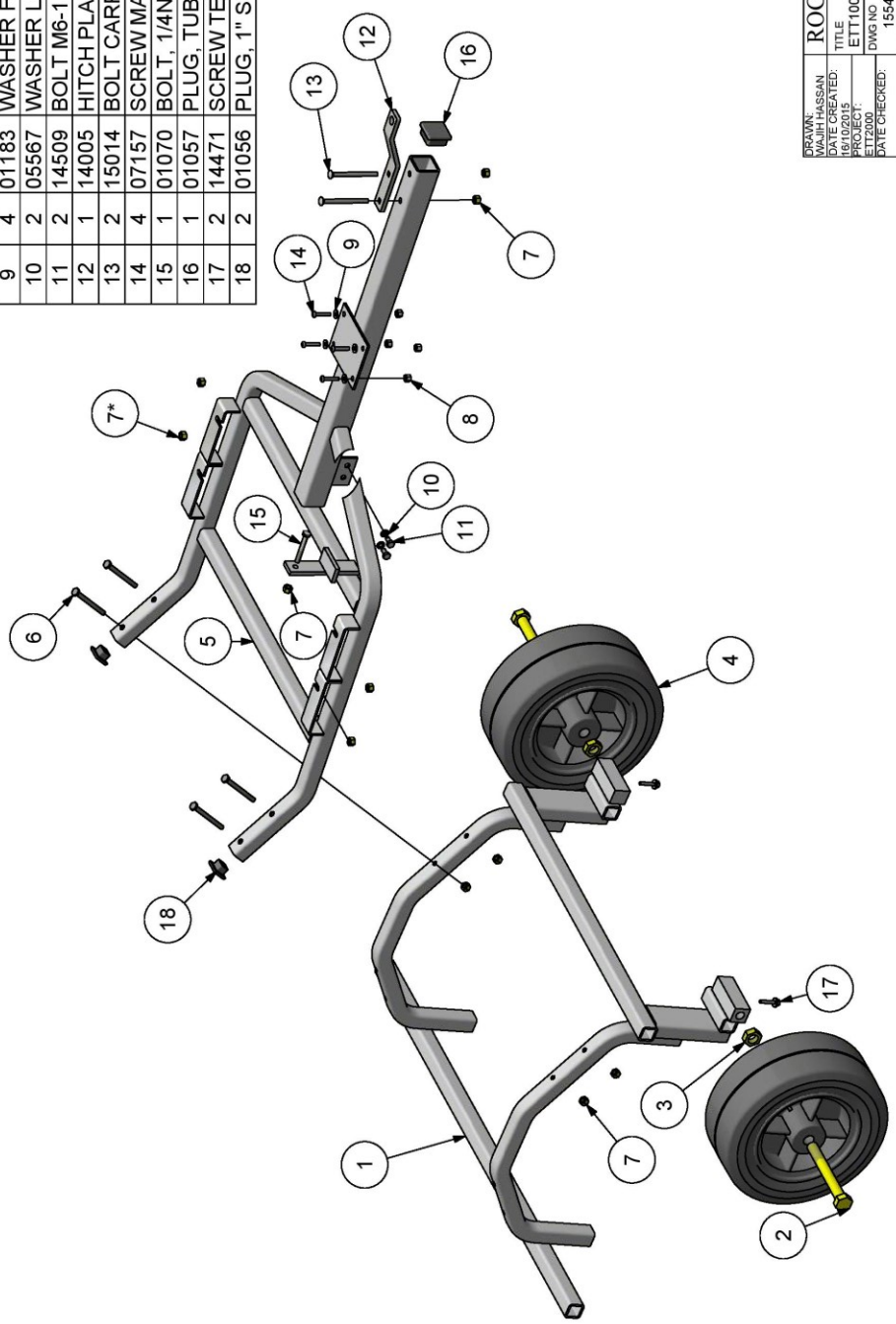

DRAWN: WAJIH HASSAN
DATE CREATED: 08/10/2015
PROJECT: ETT2000
DATE CHECKED:

ROGERS SPRAYERS INC.

TITLE
ETT1000 FRAME ASSEMBLY

DWG NO
15548

SCALE: 1 : 9
MATERIAL:
SIZE A

ETT1000 Plumbing Assembly Part # 15549

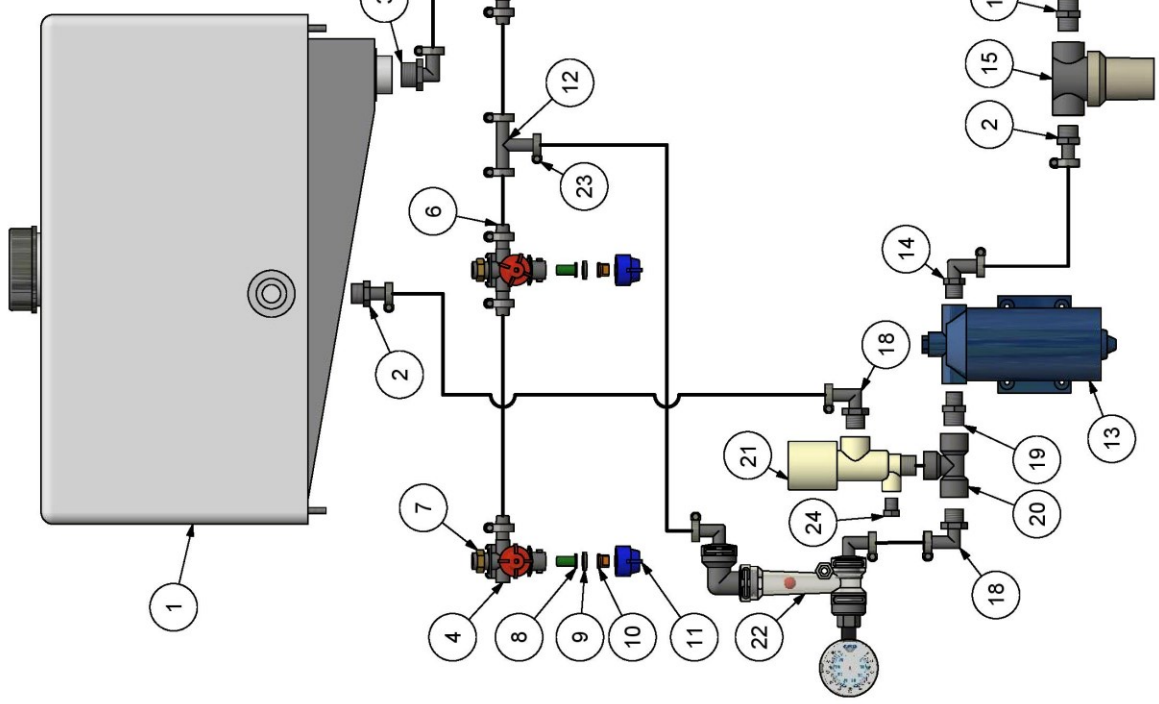

PARTS LIST

ITEM	QTY	PART#	DESCRIPTION
1	1	13664ETT	TANK RECT 10 USG ETT PREPPED
2	2	05527	FTG POLY ADPT 1/2MNPTx1/2HB
3	1	01243	FTG POLY ELB 3/4MNPTx1/2HB
4	1	14281	NOZZLE BODY TJ15R
5	1	14282	NOZZLE BODY, TJ15L
6	1	14283	NOZZLE BODY, TJ15T
7	3	12362	NUT BRASS, 11/16"
8	3	00829	SCREEN, TIP 100 MESH
9	3	14284	SEAL NOZZLE CAP, TJ
10	3	01369	TIP 8001VS ORANGE
11	3	14288	CAP TJ-NB BLUE
12	1	05816	FTG NYL TEE 1/2HB/HB/HB
13	1	14498	PUMP 12V DEL 7812 SERIES
14	1	01247	FTG POLY ELB 3/8MNPTx1/2HB
15	1	14506	STRAINER LINE 1/2 COMPACT W/MT
16	1	01085	FTG POLY NIPPLE 1/2MNPT/MNPT
17	1	01249	VALVE BALL POLY 1/2 FNPT
18	3	01235	FTG POLY ELB 1/2MNPTx1/2HB
19	1	12357	FTG POLY NIPPLE 3/8 x1/2MNPT
20	1	01084	FTG POLY TEE 1/2NPT F/F/F
21	1	12818	REGULATOR PRESSURE NYLON 1/2"
22	1	14881	FLOW KIT FY & ETT
23	16	13665	CLAMP HOSE GEAR MH6
24	1	06429	FTG POLY PLUG, 1/4MNPT

NOTE:
A. ITEM 10 (TIP) IN YOUR SPRAYER MAY BE DIFFERENT FROM THE DRAWING. SEE APPLICABLE APPLICATION RATE CHART FOR TIP USED IN UNIT

DRAWN: MAJIH HASSAN
DATE CREATED: 16/10/2015
PROJECT: ETT2000
DATE CHECKED:

ROGERS SPRAYERS INC.

TITLE: ETT1000 PLUMBING ASSEMBLY

DWG NO: 15549

SCALE: 1:6.5
MATERIAL:
SIZE: A

Flow Kit FY / ETT Part # 14881

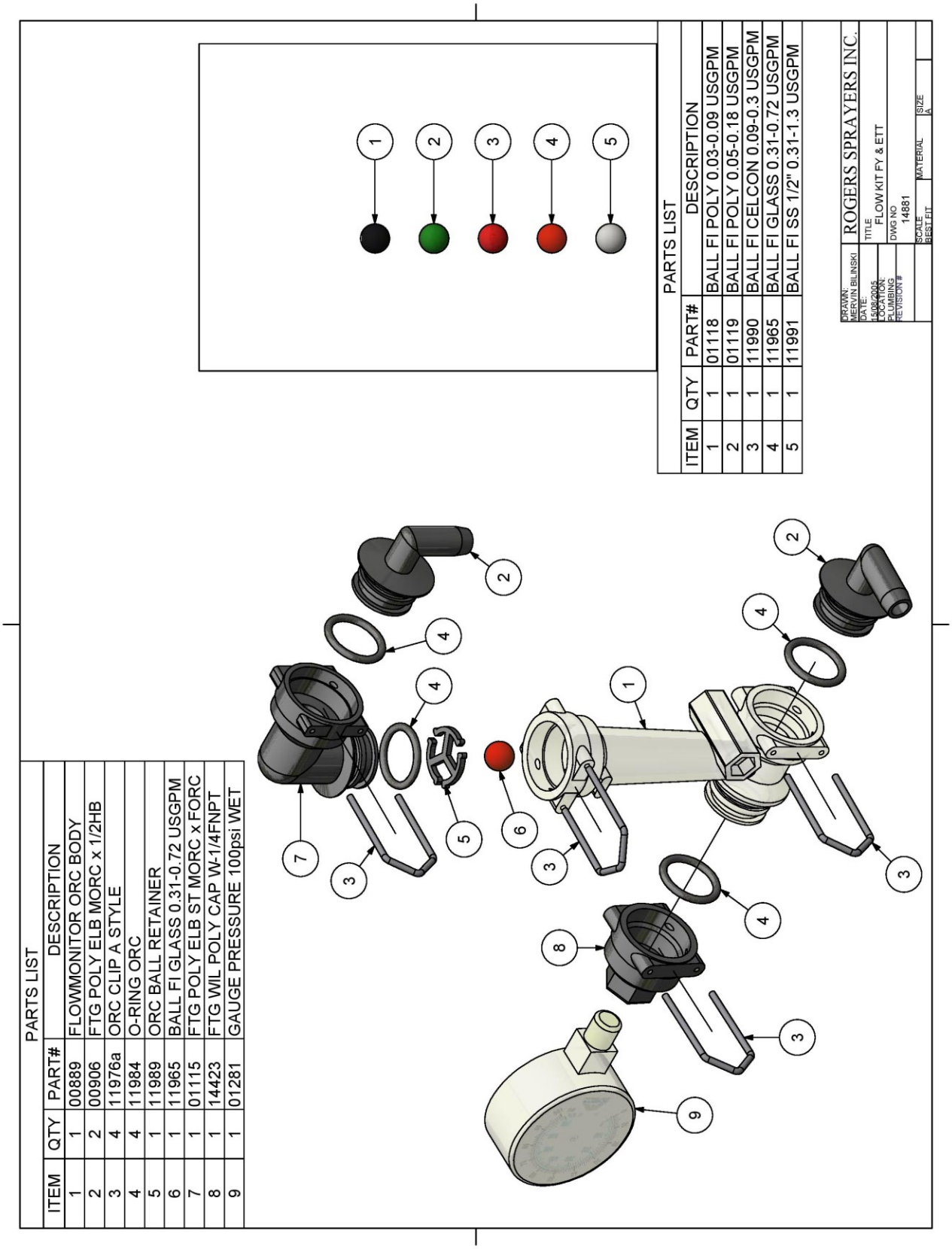

ETT Wiring Harness Part # 13764

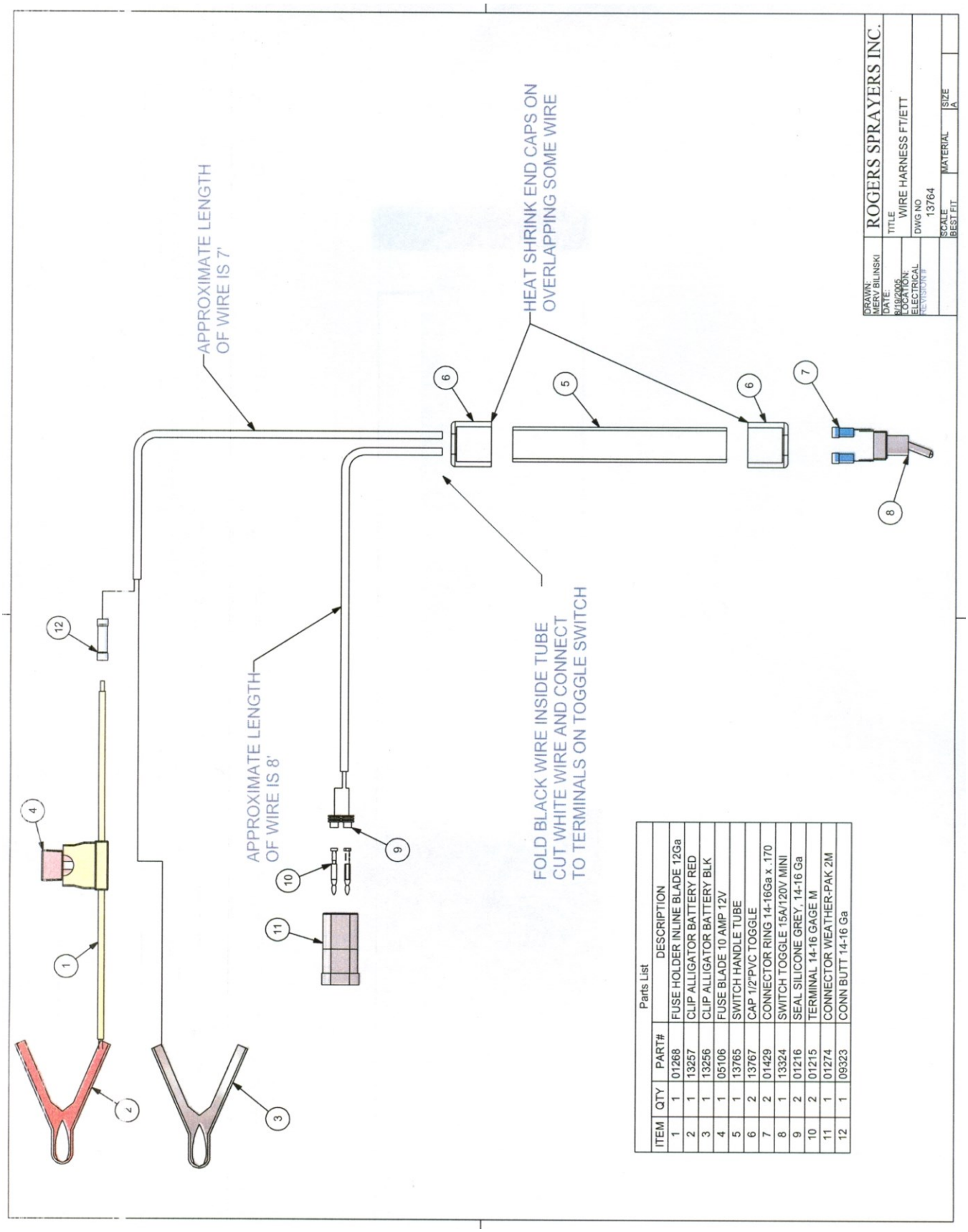

Parts List

ITEM	QTY	PART#	DESCRIPTION
1	1	01268	FUSE HOLDER INLINE BLADE 12Ga
2	1	13257	CLIP ALLIGATOR BATTERY RED
3	1	13256	CLIP ALLIGATOR BATTERY BLK
4	1	05106	FUSE BLADE 10 AMP 12V
5	1	13765	SWITCH HANDLE TUBE
6	2	13767	CAP 1/2"PVC TOGGLE
7	2	01429	CONNECTOR RING 14-16Ga x .170
8	1	13324	SWITCH TOGGLE 15A/120V MINI
9	2	01216	SEAL SILICONE GREY, 14-16 Ga
10	2	01215	TERMINAL 14-16 GAGE M
11	1	01274	CONNECTOR WEATHER-PAK 2M
12	1	09323	CONN BUTT 14-16 Ga

Rogers Sprayers Inc. (RSI)
141 - 105th Street East
Saskatoon, SK S7N 1Z2 Canada

Tel.: (306) 975-0500 or (888) 975-8294
Fax: (306) 975-0499
Email: info@rogerssprayers.com

ROGERS SPRAYERS INC OWNER WARRANTY AGREEMENT

Windfoil Drift Containment Spray Systems (DCSS) are warranted to be free of factory defects under normal and intended use for a period of one (1) year from date of purchase to the original purchaser. Equipment must be setup in accordance with factory instructions and operated, maintained and used in accordance with the operator's manual. Equipment used for rental has a warranty period of forty five (45) days. Any customization or modifications to the original equipment voids warranty immediately.

RSI reserves the right not to warranty any items that are not directly manufactured by RSI. Such components need to be returned to the factory for inspection and tested by either RSI or the original manufacturer for defects. Examples of these parts include actuators, engines, pumps and electrical systems.

All warranty Claims must be pre-authorized by the factory!

To obtain warranty, all defective parts must be returned to the factory; in some cases, location of part might require only photo of defective part. RSI must be contacted to determine which route is required. RSI through its designated dealer or factory appointed representative will repair or replace, at its option, any or all parts that are proven to be defective free of charge.

RSI DOES NOT pay or reimburse for any travel time or investigation time to determine the defective part. Warranty labor will be based on the time required for RSI to replace only the part. Warranty labor rates and replacement times will be assessed yearly and will be included in a labor replacement sheet.

This warranty does not apply to damage caused by misuse, accident, acts of god, and/or operation without proper servicing. RSI will not be responsible for consequential damages; its liability is limited to replacement of parts.

Standard wear components (see list) such as belts, nozzles, screens, bearings, wheels, flow indicator bodies or flow indicator parts are only warranted for 30 days after original purchase.

RSI makes no other expressed, implied or statutory warranty; nor is anyone authorized to make any on our behalf.

Complete your Warranty Registration online at www.rogerssprayers.com

The warranty registration is found on the Contact page of our website. The warranty registration **MUST** be filled out completely and submitted to RSI to activate the warranty. If you would prefer, a printable copy is also available online.

It is our intention to manufacture durable, user-friendly products. Any suggestions you have as to how we may improve our equipment are greatly appreciated.

ROGERS SPRAYERS INC.

141 - 105th Street East
Saskatoon, SK S7N 1Z2
Canada

Phone: (306) 975-0500
Fax: (306) 975-0499
Email: info@rogerssprayers.com
Web: www.rogerssprayers.com