# *Rogers Innovative Inc.*

626 – 47th Street East, Saskatoon, SK S7K 5X3 Canada
Phone: (306) 975-0500 Fax: (306) 975-0499
E Mail: rogers.ino@sk.sympatico.ca

# *Windfoil* Drift Containment Sprayer
# Turf Electric Walker

## TE1000, TE1500, TE2000

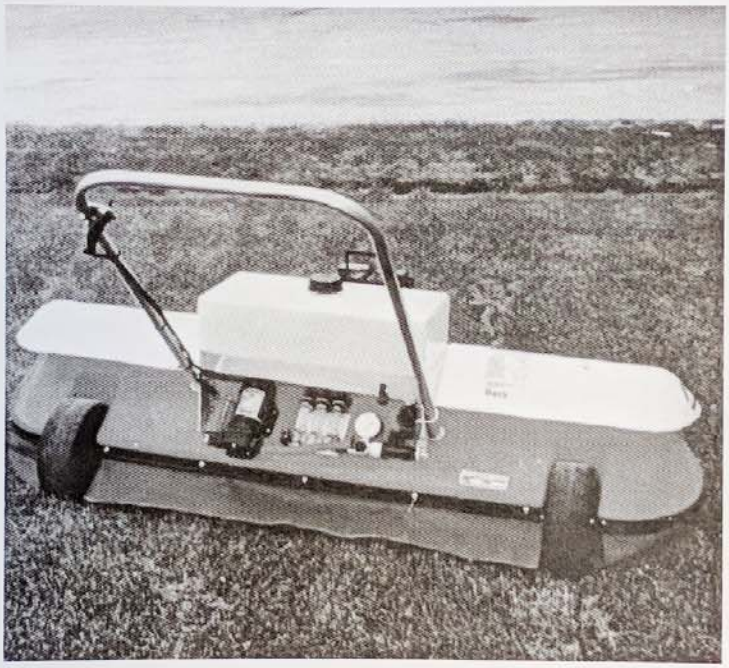

## Assembly and Operations Manual

# WINDFOIL OWNER WARRANTY AGREEMENT

Rogers Innovative Inc. (RII)
626 - 47th Street East
Saskatoon, Saskatchewan S7K 5X3 Canada
PH: (306) 975-0500 FX: (306) 975-0499

WINDFOIL sprayers are warranted to be free of defect in the factory workmanship and material, under normal use and service, when setup and operated in accordance with factory instructions, and provided they are operated and maintained in accordance with the operators manual, for a period of one year from date of purchase by the original purchaser. When the equipment is used for rental or custom application purposes the warranty period is 45 days.

RII makes no warranty with respect to engine parts, tires, engine electrical systems, pumps, batteries, tank, plumbing system components or any other component or assemblies not manufactured by RII. Such components or assemblies are subject to warranties of their respective manufacturers. RII does not warranty parts or components manufactured by RII that are damaged due to failure, or caused by improper operation of a component or assembly not manufactured by RII.

RII, through its authorized dealer or factory appointed representative, will repair or replace, at its option, any or all parts that are proven to be defective and are subject to such warranty, free of charge, upon the return of the original part or component to the factory, and RII investigation .

This warranty does not apply to damage caused by misuse, accident, acts of god, and/or operation without proper servicing. RII will not be responsible for consequential damages, its liability is limited to replacement of parts.

This warranty does not apply to those components such as belts, nozzles, or any other components or assemblies, which require regular maintenance or replacement as a result of equipment usage. Maintenance and replacement is the responsibility of the owner.

RII makes no other expressed, implied or statutory warranty nor is anyone authorized to make any on our behalf.

Warranty cards are supplied with machines when sold. The warranty card must be filled out completely and immediately returned to RII's Head Office in Saskatoon where upon RII will activate the warranty.

**IMPORTANT: WARRANTY CARDS MUST BE SENT IN TO ALLOW PROCESSING OF WARRANTY.**

**It is our intention to manufacture durable, user friendly products. Any suggestions you have as to how we may improve our equipment are greatly appreciated.**

---

## *WINDFOIL* WARRANTY REGISTRATION

**Company:** _____
**Contact & Position:** _____
**Address:** _____
**City:** _____ **State/Prov:** _____ **Zip/PC:** _____
**Country:** _____ **Phone:** ( ) _____ **Fax:** ( ) _____
**Model:** _____ **Serial No.** _____
**Model:** _____ **Serial No.** _____
**Dealer:** _____ **Date Purchased:** ___ / ___ / ___

*Table of Contents*

## Minimize Chemical Drift

The *WINDFOIL* sprayer has been designed in wind tunnels to control air flow around and behind the sprayer to minimize drift, allowing safe spraying in windy conditions. Drift can blow off a field after it has been sprayed, especially in high winds. Reasonable caution should be taken, in order to spray effectively and safely.

**For maximum drift control, keep curtain in contact with the canopy to ensure a seal to it.**

## Nozzles

The Turf Electric is equipped with conventional 80° spray tips, spaced at 10". Tips are mounted with self-aligning ¼ turn caps for easy removal or change. Tips that are actually 80° must be used, some 80° tips spray up to 95°. This will cause dripping from the outside edges of the sprayer.

## Trouble Shooting

If dripping occurs, it is caused by the diaphragm not seating properly, the diaphragm may be hard, cracked, or the seating may be damaged.

## Cleaning

Sprayers need to be cleaned to prevent corrosion, to prevent cross contamination of chemicals, and to prevent any grit or solids in the liquid that will reduce pressure. Flush with clean water, preferably after each day's operation. Rinse the outside of the sprayer.

## Winterizing

After the sprayer is thoroughly cleaned, put 2 to 5 quarts of rust inhibitor or antifreeze in the tank for final system flushing to help prevent corrosion.

## Assembly

Following the outlined steps will help to ensure a simple, trouble free assembly. All assembly references to left and right are referring to the sprayer left and right when facing the rear of the sprayer. Approximate time for first instance assembly: 1 hour and 30 minutes. See parts drawing to follow.

### Handle attachment

- ⇒ Attach handle mounts to the rear of the sprayer, sloped side facing the front of sprayer using, (2) - ¼" x 1" long bolts and (2) - ¼" nuts for each side.
- ⇒ Attach the handle to the outer side of the handle mount with, (1) - ¼" U-bolt, and (1) - ¼" x 1 ½" long bolt, for each side. Orient so the pressure gauge and hose is to the right.
- ⇒ Place bolt from outside of the support and clinch with ¼" nuts from the inner side.
- ⇒ Tighten both ends of the U-bolt evenly. **Do not over tighten**

### Attach Airfoil

- ⇒ Remove the, (2) outermost, 11/16" nozzle retaining nuts. There are, (4) found on top of the sprayer shroud (TE1000).
- ⇒ Place the airfoil support brackets in place of the retaining nut, with the top of the support sloping towards the rear of the sprayer. Refasten the nozzle retaining nuts.
- ⇒ Set the *airfoil* on top of supports. Point the long slope of the airfoil towards the rear of the sprayer.
- ⇒ Attach airfoil using, (1) - ¼" x ¾" long bolt, (1) - ¼" nut and, (2) - ¼" flat washers at each support.
- ⇒ Remove any free play in the bolts, but **do not tighten.**
- ⇒ If required, move either side of the airfoil forward or backward until the front edge of the airfoil is parallel with the ground. Tighten the airfoil attachment bolts until snug. **Do not over tighten.**

## Calibration

To calibrate, operate the sprayer at the desired pressure. Collect the output from each nozzle for 60 seconds, using an accurate measuring cup. Record the output from each nozzle. Replace nozzles that are more than 5% above or below the average reading, or have a visibly distorted spray pattern.

Run a speed test in the area to be sprayed, with a full tank. The sprayer must be at operating speed before starting the test run. To determine the speed, mark off a distance as found on one of the tables below. Spray this distance, carefully noting and recording the time to cover the distance. The actual speed can be found for the specific distance traveled and time to travel, using the table.

After the nozzles have been individually checked, the sprayer should be calibrated to determine the correct speed for the desired application volume. To get area covered, multiply the width {TE1000, 3.3'(1m), TE1500, 5'(1.5m), TE2000, 6.7'(2m)} X distance.

Table 1: Time in seconds to travel a distance of:

| mph | 10' | 25' | 50' | 100' |
|---|---|---|---|---|
| 2.5 | 2.7 | 6.8 | 13.6 | 27.3 |
| 3 | 2.3 | 5.7 | 11.4 | 22.7 |
| 4 | 1.7 | 4.3 | 8.5 | 17.0 |

Table 2: Time in seconds to travel a distance of:

| km/h | 10m | 25m | 50m | 100m |
|---|---|---|---|---|
| 3 | 12.0 | 30.0 | 60.0 | 120.0 |
| 4 | 9.0 | 22.5 | 45.0 | 90.0 |
| 5 | 7.2 | 18.0 | 36.0 | 72.0 |

## Battery

The battery is not supplied with the sprayer as it must be shipped as hazardous goods. A sealed deep cycle battery with bolt on connections must be supplied. The pump draws approximately 7amps; a 150 minute reserve battery should last about 37 hours when new.

## *Application Rate Tables*

Table 3: API Nozzle Application Rates for 10" (25cm) Spacing

| Tip (screen) 80° | Liquid PRESS. in PSI | FLOW in GPM 1 Tip | US Gal/1000sqft – 10" Spac. | | | FLOW in L/m 1 Tip | L/ha - ¼ m Spacing | | |
|---|---|---|---|---|---|---|---|---|---|
| | | | 2.5 MPH | 3 MPH | 4 MPH | | 4 km/h | 5 km/h | 6 km/h |
| **API 80015** | 30 | 0.13 | 0.71 | 0.59 | 0.44 | 0.49 | 295 | 236 | 197 |
| (80 Mesh) | 35 | 0.14 | 0.76 | 0.64 | 0.48 | 0.53 | 318 | 254 | 212 |
| Green | 40 | 0.15 | 0.82 | 0.68 | 0.51 | 0.57 | 341 | 273 | 227 |
| Part # 12480 | 45 | 0.16 | 0.87 | 0.73 | 0.55 | 0.61 | 363 | 291 | 242 |
| **API 8002** | 30 | 0.17 | 0.93 | 0.77 | 0.58 | 0.64 | 386 | 309 | 257 |
| (50 Mesh) | 35 | 0.19 | 1.04 | 0.86 | 0.65 | 0.72 | 431 | 345 | 288 |
| Yellow | 40 | 0.20 | 1.09 | 0.91 | 0.68 | 0.76 | 454 | 363 | 303 |
| Part# 12422 | 45 | 0.21 | 1.15 | 0.95 | 0.72 | 0.79 | 477 | 382 | 318 |
| **API 8003** | 30 | 0.26 | 1.42 | 1.18 | 0.89 | 0.98 | 590 | 472 | 394 |
| (50 Mesh) | 35 | 0.28 | 1.53 | 1.27 | 0.95 | 1.06 | 636 | 509 | 424 |
| Blue | 40 | 0.30 | 1.64 | 1.36 | 1.02 | 1.14 | 681 | 545 | 454 |
| Part # 01586 | 45 | 0.32 | 1.75 | 1.45 | 1.09 | 1.21 | 727 | 581 | 484 |
| **API 8004** | 30 | 0.35 | 1.91 | 1.59 | 1.19 | 1.32 | 795 | 636 | 530 |
| (50 Mesh) | 35 | 0.38 | 2.07 | 1.73 | 1.30 | 1.44 | 863 | 690 | 575 |
| Red | 40 | 0.41 | 2.24 | 1.86 | 1.40 | 1.55 | 931 | 745 | 621 |
| Part# 12423 | 45 | 0.43 | 2.35 | 1.95 | 1.47 | 1.63 | 977 | 781 | 651 |
| **API 8005** | 30 | 0.44 | 2.40 | 2.00 | 1.50 | 1.67 | 999 | 799 | 666 |
| (50 Mesh) | 35 | 0.47 | 2.56 | 2.14 | 1.60 | 1.78 | 1067 | 854 | 712 |
| Brown | 40 | 0.51 | 2.78 | 2.32 | 1.74 | 1.93 | 1158 | 927 | 772 |
| Part# 12424 | 45 | 0.54 | 2.95 | 2.45 | 1.84 | 2.04 | 1226 | 981 | 818 |
| **API 8006** | 30 | 0.52 | 2.84 | 2.36 | 1.77 | 1.97 | 1181 | 945 | 787 |
| (50 Mesh) | 35 | 0.56 | 3.05 | 2.55 | 1.91 | 2.12 | 1272 | 1017 | 848 |
| Grey | 40 | 0.60 | 3.27 | 2.73 | 2.05 | 2.27 | 1363 | 1090 | 908 |
| Part# 12425 | 45 | 0.64 | 3.49 | 2.91 | 2.18 | 2.42 | 1453 | 1163 | 969 |

Table 4: Tee Jet Application Rate for 10" (25cm) Spacing

| Tip (Screen) Colour | Liquid Press. psi | Capacity 1 nozzle gpm | U.S. Gal/1000 Sqft | | | FLOW l/min 1 Tip | L/ha - ¼ m Spacing | | |
|---|---|---|---|---|---|---|---|---|---|
| | | | 2.5 mph | 3 mph | 4 mph | | 4 km/h | 5 km/h | 6 km/h |
| 80015 | 30 | 0.13 | 0.71 | 0.59 | 0.44 | 0.49 | 295 | 236 | 197 |
| (100 mesh) | 40 | 0.15 | 0.82 | 0.68 | 0.51 | 0.57 | 341 | 273 | 227 |
| Green | 50 | 0.17 | 0.93 | 0.77 | 0.58 | 0.64 | 386 | 309 | 257 |
| Part# 00827 | 60 | 0.18 | 0.98 | 0.82 | 0.61 | 0.68 | 409 | 327 | 273 |
| 8002 | 30 | 0.17 | 0.93 | 0.77 | 0.58 | 0.64 | 386 | 309 | 257 |
| (50 mesh) | 40 | 0.2 | 1.09 | 0.91 | 0.68 | 0.76 | 454 | 363 | 303 |
| Yellow | 50 | 0.22 | 1.20 | 1.00 | 0.75 | 0.83 | 500 | 400 | 333 |
| Part# 05876 | 60 | 0.25 | 1.36 | 1.14 | 0.85 | 0.95 | 568 | 454 | 379 |
| 8003 | 30 | 0.26 | 1.42 | 1.18 | 0.89 | 0.98 | 590 | 472 | 394 |
| (50 mesh) | 40 | 0.3 | 1.64 | 1.36 | 1.02 | 1.14 | 681 | 545 | 454 |
| Blue | 50 | 0.34 | 1.85 | 1.55 | 1.16 | 1.29 | 772 | 618 | 515 |
| Part # 05877 | 60 | 0.37 | 2.02 | 1.68 | 1.26 | 1.40 | 840 | 672 | 560 |
| 8004 | 30 | 0.35 | 1.91 | 1.59 | 1.19 | 1.32 | 795 | 636 | 530 |
| (50 mesh) | 40 | 0.4 | 2.18 | 1.82 | 1.36 | 1.51 | 908 | 727 | 606 |
| Red | 50 | 0.45 | 2.45 | 2.05 | 1.53 | 1.70 | 1022 | 818 | 681 |
| Part # 05878 | 60 | 0.49 | 2.67 | 2.23 | 1.67 | 1.85 | 1113 | 890 | 742 |
| 8005 | 30 | 0.43 | 2.35 | 1.95 | 1.47 | 1.63 | 977 | 781 | 651 |
| (50 mesh) | 40 | 0.5 | 2.73 | 2.27 | 1.70 | 1.89 | 1136 | 908 | 757 |
| Brown | 50 | 0.56 | 3.05 | 2.55 | 1.91 | 2.12 | 1272 | 1017 | 848 |
| Part # 05879 | 60 | 0.61 | 3.33 | 2.77 | 2.08 | 2.31 | 1385 | 1108 | 924 |
| 8006 | 30 | 0.52 | 2.84 | 2.36 | 1.77 | 1.97 | 1181 | 945 | 787 |
| (50 mesh) | 40 | 0.6 | 3.27 | 2.73 | 2.05 | 2.27 | 1363 | 1090 | 908 |
| Grey | 50 | 0.67 | 3.65 | 3.05 | 2.28 | 2.54 | 1522 | 1217 | 1014 |
| Part# 05880 | 60 | 0.74 | 4.04 | 3.36 | 2.52 | 2.80 | 1681 | 1344 | 1120 |

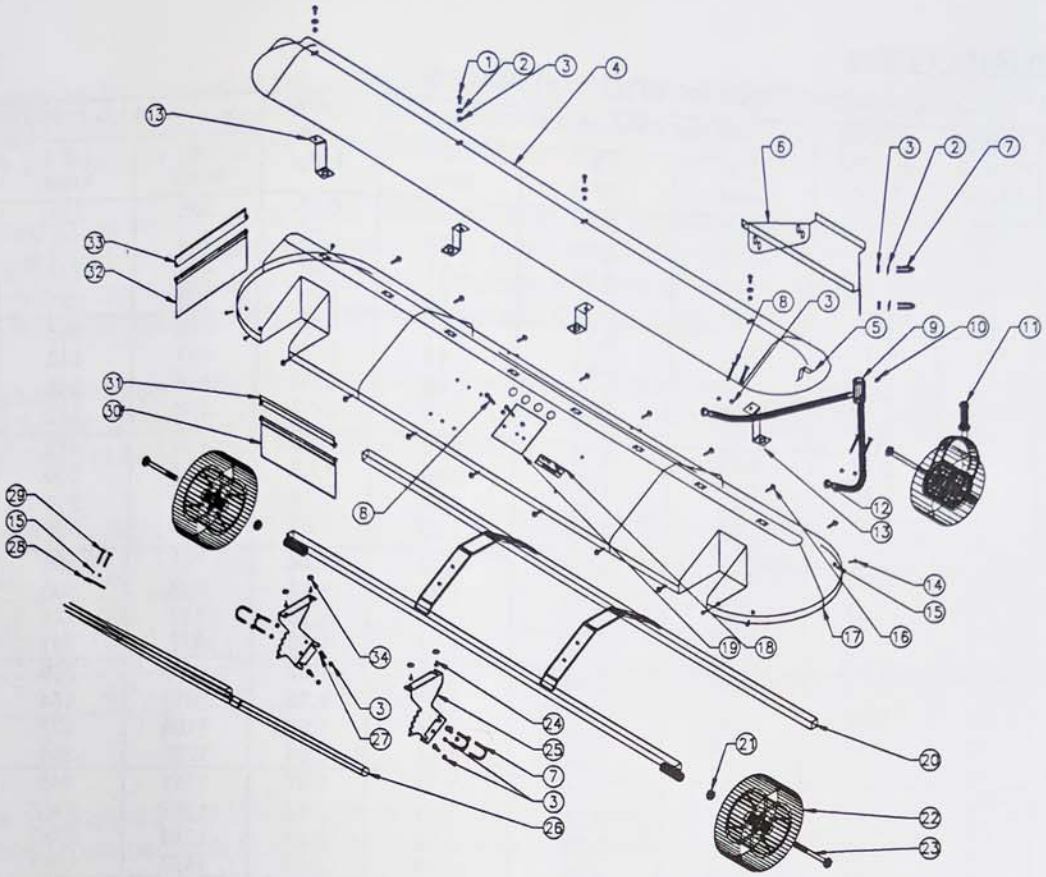

## General Assembly, Turf Electric Series

| | | TE1000 | | TE1500 | | TE2000 | |
|---|---|---|---|---|---|---|---|
| Item | Description | Part # | Qty | Part # | Qty | Part # | Qty |
| 1 | Bolt, 1/4NC x 3/4, Pld | 01154 | 2 | 01154 | 4 | 01154 | 4 |
| 2 | Wshr, Flat, 1/4, Pld | 01157 | 10 | 01157 | 12 | 01157 | 12 |
| 3 | Nut, Nylock, 1/4NC, Pld | 00968 | 30 | 00968 | 32 | 00968 | 32 |
| 4 | Airfoil, White, 40"/60"80" | 01500 | 1 | 01499 | 1 | 01654 | 1 |
| 5 | Dcl, "Windfoil" Logo | 01396 | 2 | 01396 | 2 | 01396 | 2 |
| 6 | Pl,Al,Battery,TE | 12725 | 1 | 12725 | 1 | 12725 | 1 |
| 7 | Ublt,1/4NCx1 1/8rdx2,Pld | 05111 | 10 | 05111 | 8 | 05111 | 8 |
| 8 | Bolt, 1/4NC x 2, Pld | 01070 | 4 | 01070 | 6 | 01070 | 6 |
| 9 | Frt Cstr Mt,GF/TW | 02612 | 1 | 02612 | 1 | 02612 | 1 |
| 10 | Ftg,Stl,Nip,Grease, 1/4NF | 00972 | 1 | 00972 | 1 | 00972 | 1 |
| 11 | Cstr Whl Assy,8 3/4x3 1/2,Al | 01601 | 1 | 01601 | 1 | 01601 | 1 |
| 12 | Plug, Tube, Rd, Plstc, 1 | 04794 | 2 | 04794 | 2 | 04794 | 2 |
| 13 | Airfoil, Standoff, Left, Al | 00721L | 1 | 00721L | 2 | 00721L | 2 |
| 13 | Airfoil, Standoff, Right, Al | 00721R | 1 | 00721R | 2 | 00721R | 2 |
| 14 | Scr, Mach, C, #10-24 | 01152 | 6 | 01152 | 6 | 01152 | 6 |
| 15 | Nut, Nylock, #10, Pld | 01153 | 6 | 01153 | 6 | 01153 | 6 |
| 16 | Scr, TEK, #12 x 1 ¼ | 01156 | 7 | 01156 | 11 | 01156 | 11 |
| 17 | Shroud,LP,Red, 40"/60"/80" | 12951 | 1 | 12952 | 1 | 12953 | 1 |
| 18 | Pl,Serial,RogersTypable Al | 01398 | 1 | 01398 | 1 | 01398 | 1 |
| 19 | Pl,Al,Backing,Wing | 12046 | 0 | 12045 | 0 | 12046 | 0 |
| 20 | Frame, Al | 01589 | 1 | 01592 | 1 | 01595 | 1 |
| 21 | Nut, 5/8NC, Pld | 01313 | 2 | 01313 | 2 | 01313 | 2 |
| 22 | Whl Assy,10 1/4x4,Smooth Tread | 00920 | 2 | 00920 | 2 | 00920 | 2 |
| 23 | Bolt, 5/8NC x 5, Pld | 12387 | 2 | 12387 | 2 | 12387 | 2 |
| 24 | Scr, Mach, C, #10-24 x 3/8 | 00048 | 4 | 00048 | 4 | 00048 | 4 |
| 25 | Pl,Al,Tank Mt,Left,TW | 07134L | 1 | 07134L | 1 | 07134L | 1 |
| 25 | Pl,Al,Tank Mt,Right,TW | 07134R | 1 | 07134R | 1 | 07134R | 1 |
| 26 | Handle,Al,Wlkg Boom, | 12950 | 1 | 12950 | 1 | 12950 | 1 |
| 27 | Bolt, 1/4NC x 1, Pld | 01164 | 4 | 01164 | 4 | 01164 | 4 |
| 28 | Pl,Al,Switch,TE | 12722 | 1 | 12722 | 1 | 12722 | 1 |
| 29 | Scr, Mach, C, #10-24 x 1 ½ | 05385 | 2 | 05385 | 2 | 05385 | 2 |
| 30 | Curtain, Blue, 5 ½ | 02976 | 1 | 06260 | 1 | 01666 | 1 |
| 31 | Curtain Hanger | 02550 | 1 | 06264 | 1 | 01668 | 1 |
| 32 | Curtain, Blue, 5 1/2 | 01638 | 1 | 06259 | 1 | 01665 | 1 |
| 33 | Curtain Hanger | 02566 | 1 | 06263 | 1 | 01667 | 1 |
| 34 | Washer,Flat,#10,Pld | 01183 | 4 | 01183 | 4 | 01183 | 4 |
| 35 | Dcl, Airfoil, "Front & Back" | 12341 | 1 | 12341 | 1 | 12341 | 1 |

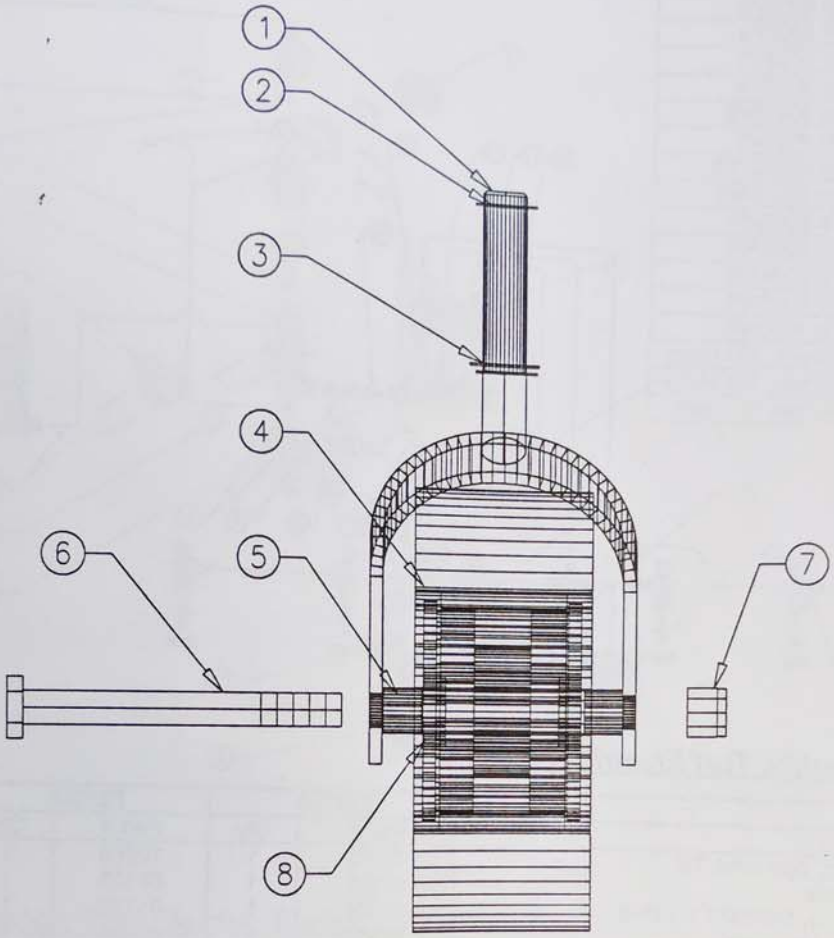


## ***Castor Wheel Assembly, LP Series***

| Item | Description | Part # | Qty |
|---|---|---|---|
| 1 | Castor Arm,7/8" Shaft | 01599 | 1 |
| 2 | Snap Ring,7/8" | 05177 | 2 |
| 3 | Bushing,Machinery,#5,7/8"ID | 05593 | 2 |
| 4 | Wheel Assembly | 05026 | 1 |
| 5 | Spacer,Castor Wheel,3/4" | 00159 | 2 |
| 6 | Bolt,5/8NCX6 ½ | 01166 | 1 |
| 7 | Nut,Nylock,5/8NC | 01051 | 1 |
| 8 | Bearing,5/8IDX35mmOD | 00857 | 0 |

## Optional Parts

| # | Part # | Description |
|---|---|---|
| 22 | 05881 | Tip 8008VS |
| 22 | 05880 | Tip 8006VS |
| 22 | 05879 | Tip 8005VS |
| 22 | 05878 | Tip 8004VS |
| 22 | 05877 | Tip 8003VS |
| 22 | 05876 | Tip 8002VS |
| 22 | 00827 | Tip 80015VS |
| 22 | 01369 | Tip 8001VS |
| 22 | 05872 | Tip 800067SS |
| 22 | 12480 | Tip 80015API |
| 22 | 12422 | Tip 8002API |
| 22 | 01586 | Tip 8003API |
| 22 | 12423 | Tip 8004API |
| 22 | 12424 | Tip 8005API |
| 22 | 12425 | Tip 8006API |
| 20 | 04722 | Screen, 200 Mesh |
| 20 | 00829 | Screen, 100 Mesh |
| 20 | 04720 | Screen, 50 Mesh |

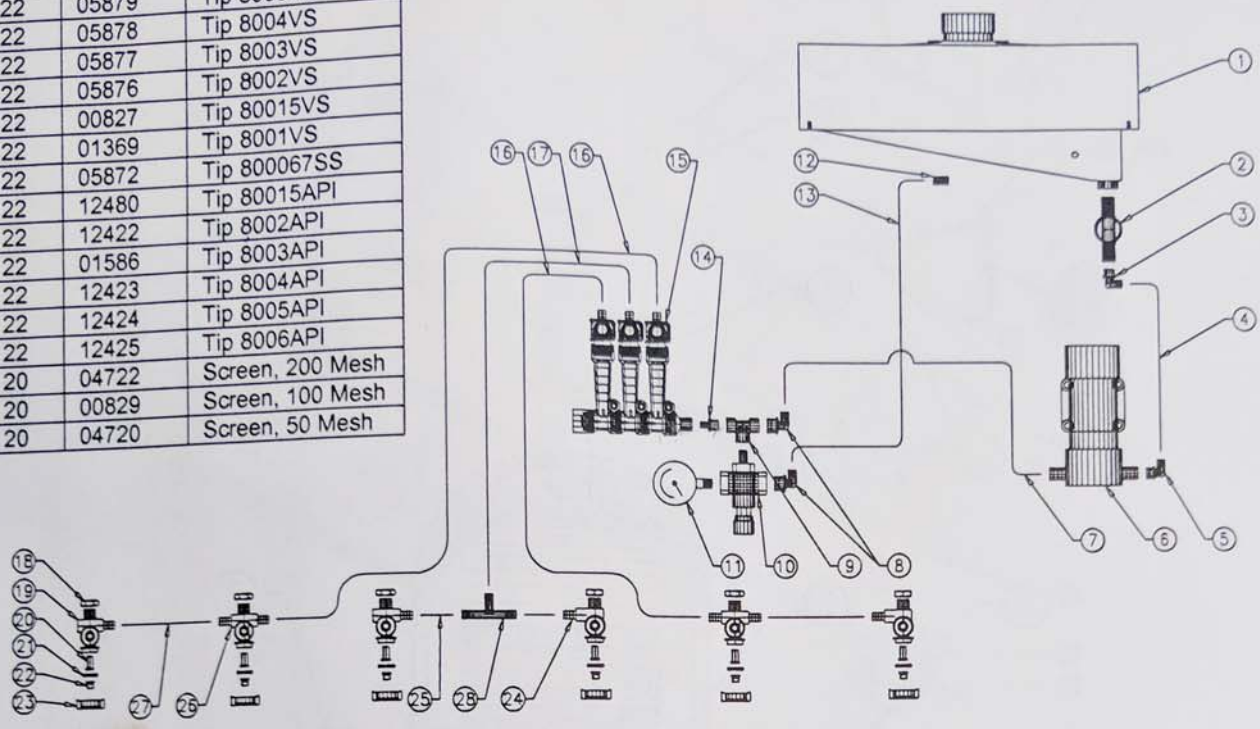

## Plumbing Assembly, Turf Electric Series

| | | TE1000 | | TE1500 | | TE2000 | |
|---|---|---|---|---|---|---|---|
| Item | Description | Part # | Qty | Part # | Qty | Part # | Qty |
| 1 | Tank, Rect, 5gal w/lid, TE | 12955 | 1 | 12955 | 1 | 12955 | 1 |
| 2 | Strainer,Line | 07103 | 1 | 07103 | 1 | 07103 | 1 |
| 3 | Ftg,Poly,Elb, 1/4MNPT x 1/2HB | 01239 | 1 | 01239 | 1 | 01239 | 1 |
| 4 | Hose,Red,1/2,300psi | 05334 | 1 | 05334 | 1 | 05334 | 1 |
| 5 | Ftg,Poly,Elb,Flowjet | 12787 | 1 | 12787 | 1 | 12787 | 1 |
| 6 | Pump,12V,3.7gpm max,45psi max | 01280 | 1 | 01280 | 1 | 01280 | 1 |
| 6a | Repair Kit,FloJet | 12375 | 0 | 12375 | 0 | 12375 | 0 |
| 7 | Hose,Red,1/2,300psi | 07199 | 1 | 07199 | 1 | 07199 | 1 |
| 8 | Ftg,Poly,Elb, 1/2MNPT x 1/2HB | 01235 | 2 | 01235 | 2 | 01235 | 2 |
| 9 | Ftg,Nyl,Tee, 1/2NPT F/F/F | 01084 | 1 | 01084 | 1 | 01084 | 1 |
| 10 | Regulator, Pressure | 12818 | 1 | 12818 | 1 | 12818 | 1 |
| 11 | Gauge Pressure | 01281 | 1 | 01281 | 1 | 01281 | 1 |
| 12 | Ftg,Poly,Adpt, 1/4MNPT x 1/2HB | 01202 | 1 | 01202 | 1 | 01202 | 1 |
| 13 | Hose,Red,1/2,300psi | 05999 | 1 | 05999 | 1 | 05999 | 1 |
| 14 | Ftg,Brs,Nip, 1/2MNPT x 1/4MNPT | 12931 | 1 | 12931 | 1 | 12931 | 1 |
| 15 | ORC Rotometer Assy, | 12729 | 1 | 12728 | 1 | 12729 | 1 |
| 16 | Hose,Red,1/2 ,300psi | 07751 | 2 | 07199 | 2 | 12220 | 1 |
| 17 | Hose,Red,1/2,300psi | 05324 | 2 | 12949 | 1 | 12219 | 2 |
| 18 | Nut, Brs, 11/16 | 12362 | 4 | 12362 | 6 | 12362 | 8 |
| 19 | Noz Body Assy,15psi,Wilger | 12301 | 2 | 12301 | 2 | 12301 | 2 |
| 20 | Screen,Tip, 100 Mesh | 00829 | 4 | 00829 | 6 | 00829 | 8 |
| 21 | Seal, Nozzle Cap, Wilger | 01521 | 4 | 01521 | 6 | 01521 | 8 |
| 22 | Tip,Spray, 8001VS, Flat Fan,80° | 01369 | 4 | 01369 | 6 | 01369 | 8 |
| 23 | Ftg,Poly,Cap,Noz,Std,Self Aligning | 01532 | 4 | 01532 | 6 | 01532 | 8 |
| 24 | Noz Body Assy,15psi,Wilger | 12300 | 2 | 12300 | 2 | 12300 | 2 |
| 25 | Hose,Red,1/2,300psi | N/A | N/A | 01648 | 2 | 01648 | 2 |
| 26 | Noz Body Assy,15psi,Wilger | N/A | N/A | 12302 | 2 | 12302 | 4 |
| 27 | Hose,Red,1/2,300psi | N/A | N/A | 05350 | 2 | N/A | N/A |
| 28 | Ftg,Nyl,Tee, 1/2HB/HB/HB | N/A | N/A | 05816 | 1 | N/A | N/A |
| 29 | Scr, Mach, C, 1/4 x 1 | 05513 | 4 | 05513 | 4 | 05513 | 4 |
| 30 | Nut, Nylock, 1/4NC, Pld | 00968 | 4 | 00968 | 4 | 00968 | 4 |
| 31 | Wshr, Flat, 1/4, Pld | 01157 | 4 | 01157 | 4 | 01157 | 4 |
| 32 | Clamp,Hose,Plstc,SNP-16 | 01092 | 16 | 01092 | 20 | 01092 | 22 |

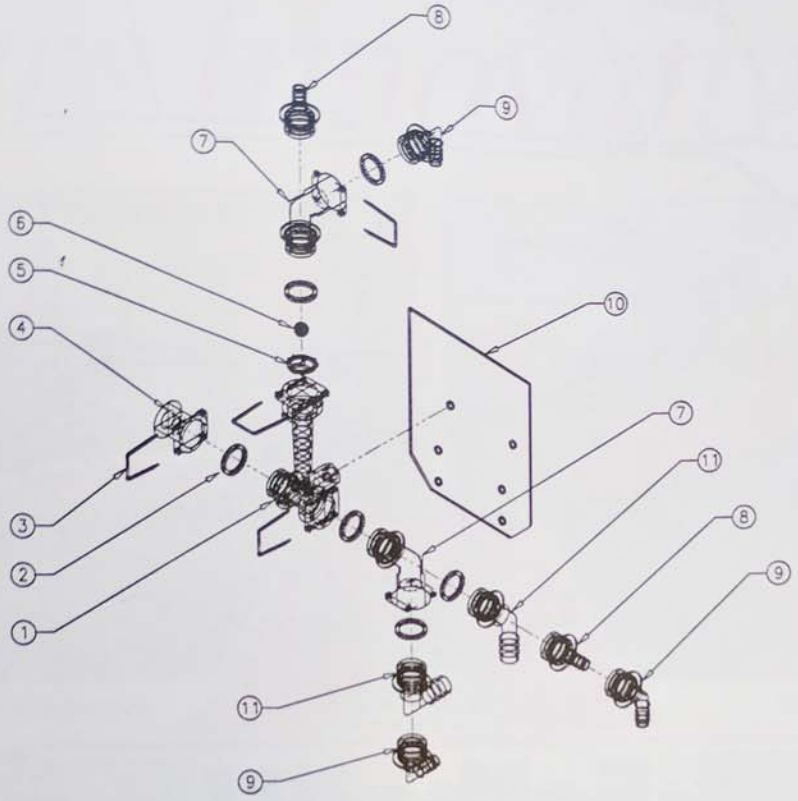


## *Rotometer Assembly, Turf Electric Series*

| | | TE 1000/2000 | | TE1500 | |
|---|---|---|---|---|---|
| Item | Description | Part # | Qty | Part # | Qty |
| 1 | ORC, Rotometer Body | 00889 | 4 | 00889 | 3 |
| 2 | ORC, O-Ring | 11984 | 13 | 11984 | 10 |
| 3 | ORC, Clip | 11976 | 13 | 11976 | 10 |
| 4 | ORC, End Cap | 00909 | 1 | 00909 | 1 |
| 5 | ORC, Ball, Retainer | 11989 | 4 | 11989 | 3 |
| 6 | ORC, Ball, Red | 11990 | 4 | 11990 | 3 |
| 6 | ORC, Ball, SS | 11991 | 4 | 11991 | 3 |
| 7 | ORC, ¾" Street Elbow | 01115 | 4 | 01115 | 3 |
| 8 | ORC, ¼" NPT | 12727 | 1 | 12727 | 1 |
| 9 | ORC, ½" H.B. Elbow | 00906 | 4 | 00906 | 3 |
| 10 | Backing Plate, Al | 12046 | 1 | 12045 | 1 |
| 11 | ORC, ¾" H.B. Elbow | 00905 | N/A | 00905 | N/A |

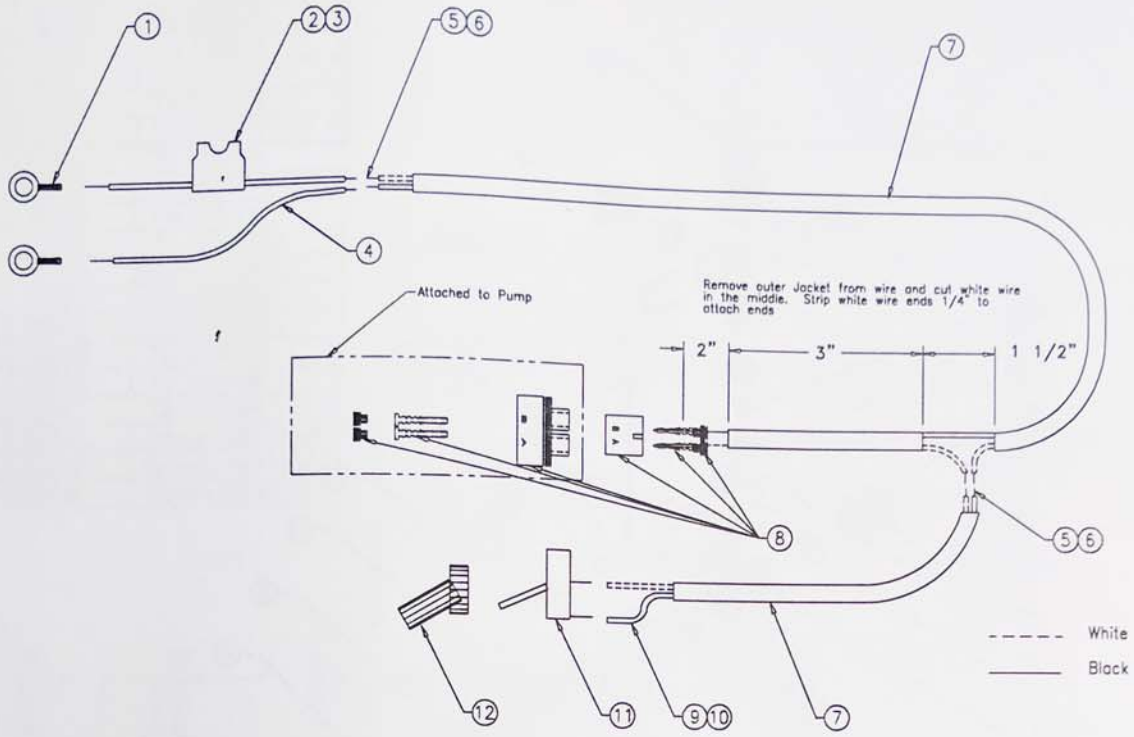


## *Electrical Assembly, Turf Electric Series*

| Item | Description | Part # | Qty |
|---|---|---|---|
| 1 | Conn,Ring,14-16GaX3/8,Insul,Blue | 01291 | 2 |
| 2 | Fuse,Blade,10Amp | 05106 | 1 |
| 3 | Fuse Holder, Blade Type, Inline,12Ga | 01268 | 1 |
| 4 | Wire,14Ga,Stranded,9" | 01771 | 1 |
| 5 | Conn,Butt,14-16Ga,Insul | 09323 | 1 |
| 6 | Heat Shrink,Ø3/4"X4" | 12297 | 1 |
| 7 | Cable,14/2X28,Blk Rbr Jacketed | 12738 | 1 |
| 8 | Conn Kit, Wea-Pak,2M/F | 11823 | 1 |
| 9 | Conn,Ring,14-16GaX0.170,Blue | 01291 | 2 |
| 10 | Heat Shrink, Ø1 ½"X3" | 12298 | 1 |
| 11 | Switch,15A,Toggle,Single Pole/Throw | 01405 | 1 |
| 12 | Boot,Rubber,for 01405 | 12736 | 1 |
| 13 | Nytie,Bk UV,3/16X15 ½ | 00974 | 2 |